SCHWINN® 270

Manual en Español Latino Americano:
http://www.schwinnfitness.com

ASSEMBLY MANUAL / OWNER'S MANUAL

TABLE OF CONTENTS

Important Safety Instructions	3
Safety Warning Labels / Serial Number	5
Specifications	6
Before Assembly	6
Parts	7
Hardware	8
Tools	8
Assembly	9
Moving the Machine	19
Leveling the Machine	20
Features	21
Console Features	22
Bluetooth® Connectivity	25
Virtual Reality Experience on Your Fitness Machine	26
Remote Heart Rate Monitor	27
Operations	28
Adjustments	28
Power Up / Idle Mode	28
Initial Setup	29
Quick Start Program	29
User Profiles	29
Profile Programs	31
Pausing or Stopping	34
Results / Cool Down Mode	35
GOAL TRACK Statistics	35
Console Service Mode	37
Maintenance	38
Maintenance Parts	39
Troubleshooting	41
Warranty	45

To validate warranty support, keep the original proof of purchase and record the following information:

Serial Number _____

Date of Purchase _____

To register your product warranty , go to: **www.SchwinnFitness.com/register**

Or call 1 (800) 605–3369.

If you have questions or problems with your product, please call 1 (800) 605–3369

Or go to: www.SchwinnFitness.com

Nautilus, Inc., www.NautilusInc.com - Customer Service: North America (800) 605-3369, csnls@nautilus.com | outside U.S. www.nautilusinternational.com | © 2016 Nautilus, Inc. | ® indicates trademarks registered in the United States. These marks may be registered in other nations or otherwise protected by common law. Schwinn, the Schwinn Quality logo, Schwinn 270, Bowflex, Nautilus, and Universal are trademarks owned by or licensed to Nautilus, Inc. Polar®, OwnCode®, iTunes®, Google Play™, Under Armour®, MyFitnessPal®, iOS® and Android™ are trademarks of their respective owners. The Bluetooth® word mark and logos are registered trademarks owned by Bluetooth SIG, Inc., and any use of such marks by Nautilus, Inc. is under license.

⚠ **This icon means a potentially hazardous situation which, if not avoided, could result in death or serious injury.**

Obey the following warnings:

⚠ **Read and understand all warnings on this machine.**

Carefully read and understand the Assembly instructions.

- Keep bystanders and children away from the product you are assembling at all times.
- Do not connect power supply to the machine until instructed to do so.
- Do not assemble this machine outdoors or in a wet or moist location.
- Make sure assembly is done in an appropriate work space away from foot traffic and exposure to bystanders.
- Some components of the machine can be heavy or awkward. Use a second person when doing the assembly steps involving these parts. Do not do steps that involve heavy lifting or awkward movements on your own.
- Set up this machine on a solid, level, horizontal surface.
- Do not try to change the design or functionality of this machine. This could compromise the safety of this machine and will void the warranty.
- If replacement parts are necessary, use only genuine Nautilus replacement parts and hardware. Failure to use genuine replacement parts can cause a risk to users, keep the machine from operating correctly and void the warranty.
- Do not use until the machine has been fully assembled and inspected for correct performance in accordance with the Manual.
- Read and understand the complete Manual supplied with this machine before first use. Keep the Manual for future reference.
- Do all assembly steps in the sequence given. Incorrect assembly can lead to injury or incorrect function.

Before using this equipment, obey the following warnings:

⚠ **Read and understand the complete Manual. Keep the Manual for future reference.**

Read and understand all warnings on this machine. If at any time the Warning labels become loose, unreadable or dislodged, contact Nautilus Customer Service for replacement labels.

- Children must not be let on or near to this machine. Moving parts and other features of the machine can be dangerous to children.
- Not intended for use by anyone under 14 years of age.
- Consult a physician before you start an exercise program. Stop exercising if you feel pain or tightness in your chest, become short of breath, or feel faint. Contact your doctor before you use the machine again. Use the values calculated or measured by the machine's computer for reference purposes only.
- Before each use, examine this machine for loose parts or signs of wear. Do not use if found in this condition. Monitor the Seat, Pedals, and Crank Arms closely. Contact Nautilus Customer Service for repair information.
- This appliance should only be used with the power supply unit provided, or a replacement power supply unit supplied from Nautilus, Inc.
- Maximum user weight limit: 300 lbs. (136 kg). Do not use if you are over this weight.
- This machine is for home use only.
- Do not wear loose clothing or jewelry. This machine contains moving parts. Do not put fingers or other objects into moving parts of the exercise equipment.
- Set up and operate this machine on a solid, level, horizontal surface.

- Make the Pedals stable before you step on them. Use caution when you step on and off the machine.
- Disconnect all power before servicing this machine.
- Do not operate this machine outdoors or in moist or wet locations. Keep the foot pedals clean and dry.
- Keep at least 24” (0.6 m) on each side of the machine clear. This is the recommended safe distance for access and passage around and emergency dismounts from the machine. Keep third parties out of this space when machine is in use.
- Do not over exert yourself during exercise. Operate the machine in the manner described in this manual.
- Correctly adjust and safely engage all Positional Adjustment Devices. Make sure that the Adjustment Devices do not hit the user.
- Exercise on this machine requires coordination and balance. Be sure to anticipate that changes in speed and resistance level can occur during workouts, and be attentive in order to avoid loss of balance and possible injury.
- Prior to use, read and understand the owner’s manual. The appliance is not to be used by persons with functional limitations and impairments, reduced physical, sensory or mental capabilities, or lack of experience and knowledge.

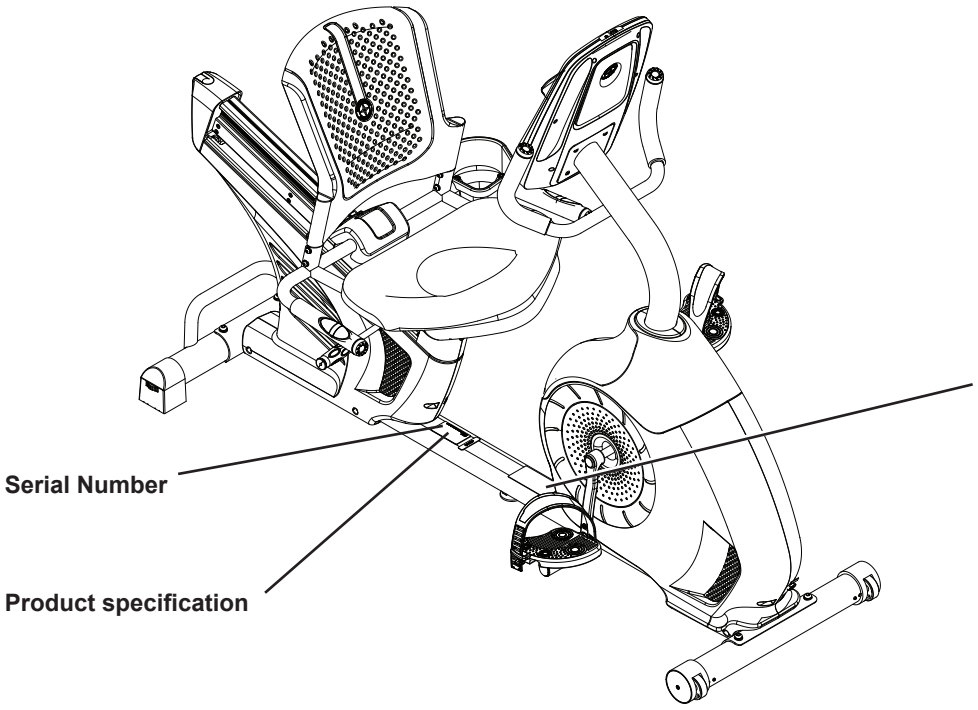

WARNING!

- **Injury or death is possible if caution is not used while using this machine.**
- **Keep children and pets away.**
- **Read and follow all warnings on this machine.**
- **Refer to the Owner's Manual for additional warnings and safety information.**
- **The heart rate displayed is an approximation and should be used for reference only.**
- **Not intended for use by anyone under 14 years of age.**
- **The maximum user weight for this machine is 300 lbs (136kg).**
- **This machine is for home use only.**
- **Consult a physician prior to using any exercise equipment.**

FCC Compliance

⚠ Changes or modifications to this unit not expressly approved by the party responsible for compliance could void the user's authority to operate the equipment.

The machine and power supply comply with part 15 of the FCC rules. Operation is subject to the following two conditions: (1) This device may not cause harmful interference, and (2) this device must accept any interference received, including interference that may cause undesired operation.

Note: This machine and power supply have been tested and found to comply with the limits for a Class B digital device, pursuant to Part 15 of the FCC Rules. These limits are designed to provide reasonable protection against harmful interference in a residential installation. This equipment generates, uses and can radiate radio frequency energy and, if not installed and used in accordance with the instructions, may cause harmful interference to radio communications.

However, there is no guarantee that interference will not occur in a particular installation. If this equipment does cause harmful interference to radio or television reception, which can be determined by turning the equipment off and on, the user is encouraged to try to correct the interference by one or more of the following measures:

- Reorient or relocate the receiving antenna.
- Increase the separation between the equipment and receiver.
- Connect the equipment into an outlet on a circuit different from that to which the receiver is connected.
- Consult the dealer or an experienced radio/TV technician for help.

SPECIFICATIONS

Maximum User Weight: 300 lbs. (136 kg)

Power Requirements:
Operational Voltage: 9VDC
Operating Current: 1500 mA

Regulatory Approvals:
AC Power Adapter: UL listed, CSA certified, Rated 120V 60Hz Input, 9VDC, 1500mA Output. Class 2.

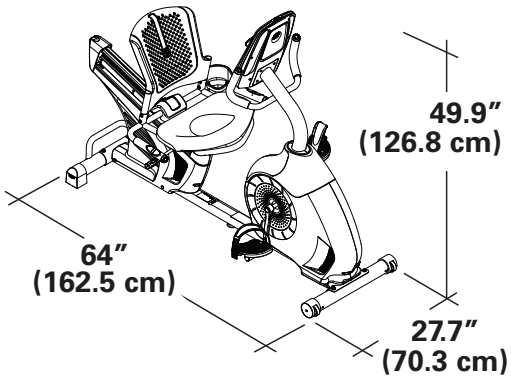

WARNING: This product, its packaging, and components contain chemicals known to the State of California to cause cancer, birth defects, or reproductive harm. This Notice is provided in accordance with California's Proposition 65. If you would like additional information, please refer to our website at www.nautilus.com/prop65.

Before Assembly

Select the area where you are going to set up and operate your machine. For safe operation, the location must be on a hard, level surface. Allow a workout area of a minimum 74.6" x 110.5" (189.5 cm x 280.5 cm).

Basic Assembly Tips

Follow these basic points when you assemble your machine:

- Read and understand the "Important Safety Instructions" before assembly.
- Collect all the pieces necessary for each assembly step.
- Using the recommended wrenches, turn the bolts and nuts to the right (clockwise) to tighten, and the left (counter-clockwise) to loosen, unless instructed otherwise.
- When attaching 2 pieces, lightly lift and look through the bolt holes to help insert the bolt through the holes.
- The assembly can require 2 people.

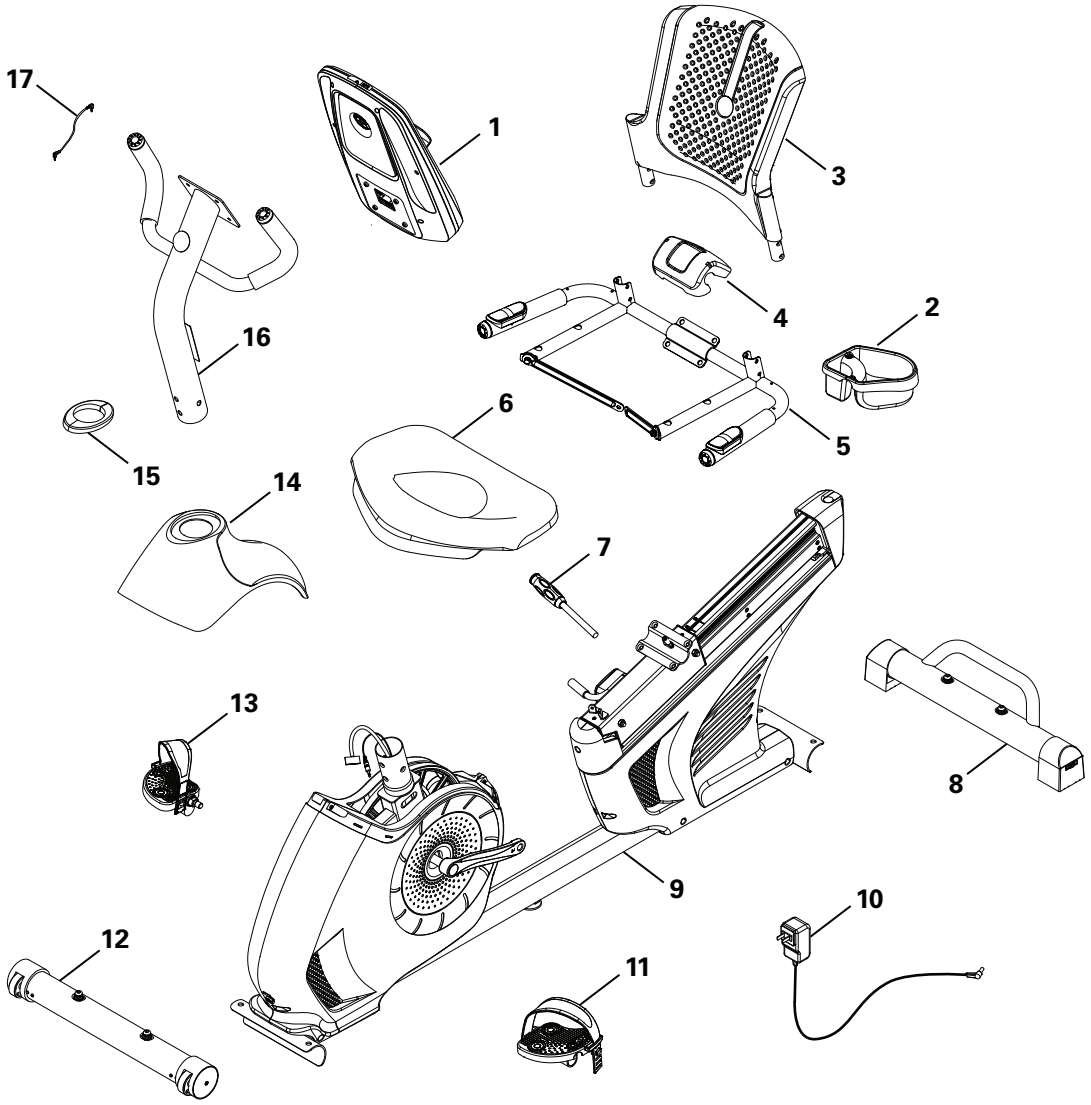

Item	Qty	Description	Item	Qty	Description
1	1	Console	10	1	AC Adapter
2	1	Water Bottle Holder	11	1	Left Pedal
3	1	Seat Back	12	1	Front Stabilizer
4	1	Seat Cover	13	1	Right Pedal
5	1	Seat Frame Assembly	14	1	Upper Shroud
6	1	Seat Bottom	15	1	Shroud Cap
7	1	Seat Adjustment Handle	16	1	Console Mast
8	1	Rear Stabilizer	17	1	Media Cable
9	1	Frame			

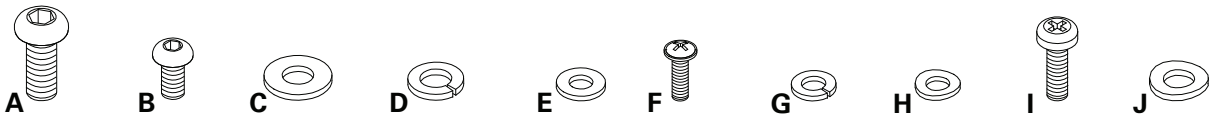

Item	Qty	Description	Item	Qty	Description
A	8	Button Head Hex Screw, M8x20	F	2	Phillips Head Screw, M5x12
B	10	Button Head Hex Screw, M6x12	G	14	Lock Washer, M6
C	4	Flat Washer, M8	H	4	Curved Washer, M6
D	8	Lock Washer, M8	I	4	Phillips Head Screw, M6x25
E	10	Flat Washer, M6	J	4	Curved Washer, M8

Note: Select pieces of Hardware have been provided as spares on the Hardware Card. Be aware that there may be remaining Hardware after the proper assembly of your machine.

Tools

Included

4 mm
6 mm

Not Included

(recommended)

1. Attach Stabilizers to Frame

Note: Hardware is pre-installed and not on the Hardware Card. *

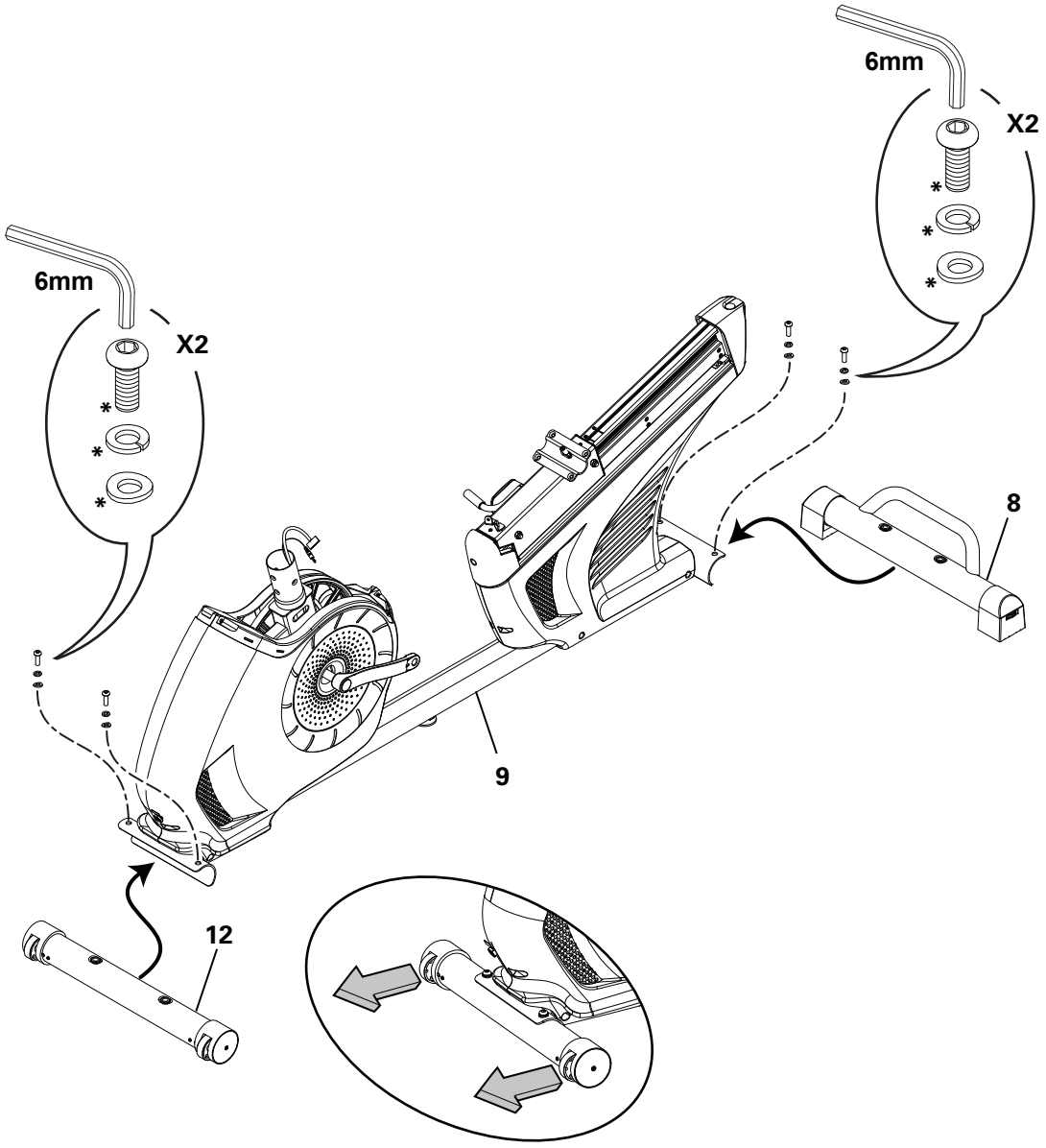

2. Attach the Seat Frame Assembly to the Seat Rail

NOTICE: Do not crimp the Heart Rate Cable. Once all hardware has been inserted, be sure to fully tighten it.

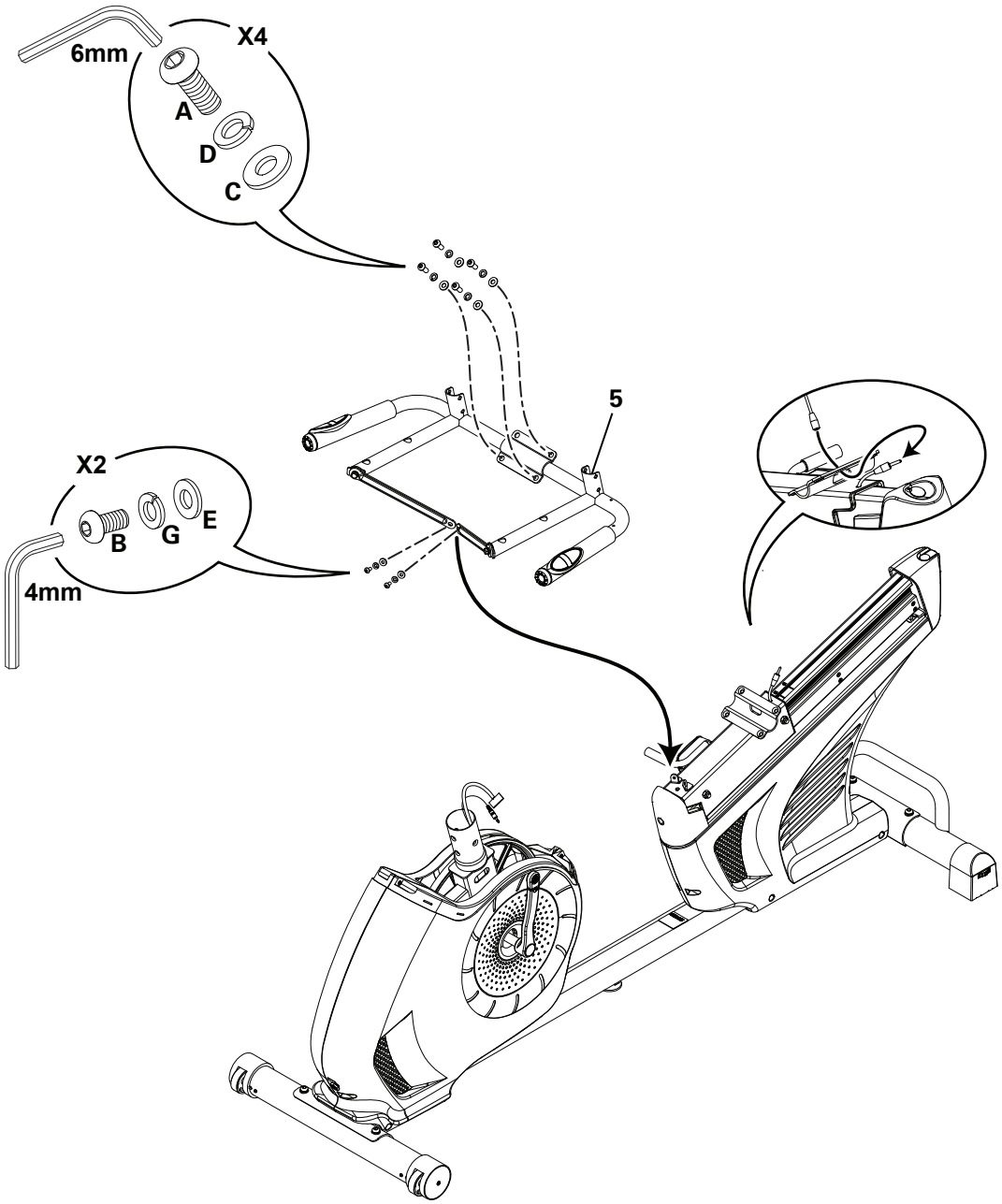

3. Attach Seat Pads to Seat Frame Assembly

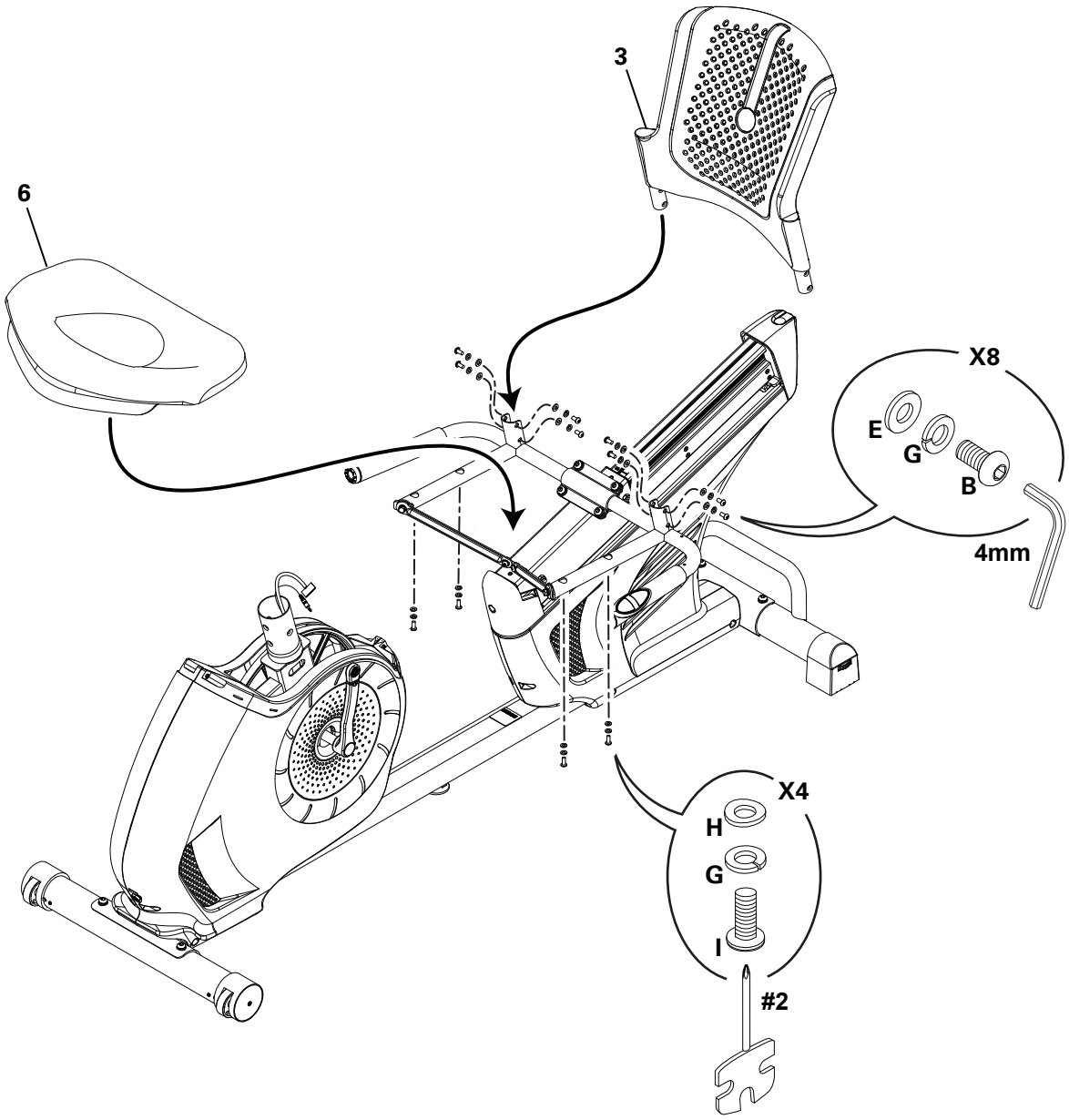

4. Attach Cover to Frame Assembly

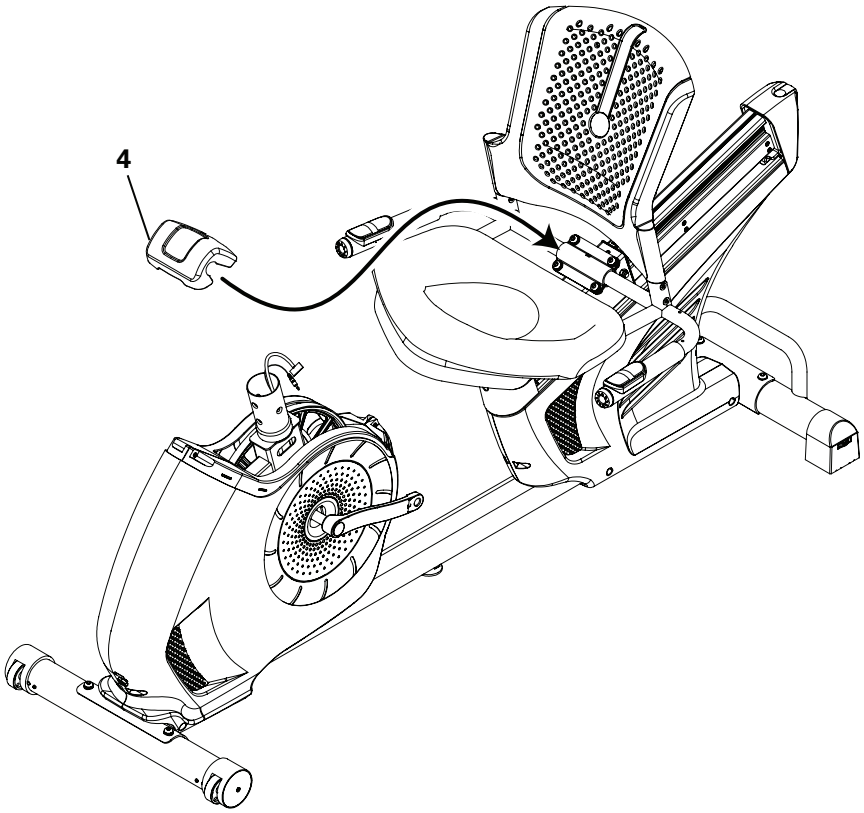

5. Attach Seat Adjustment Handle to Frame Assembly

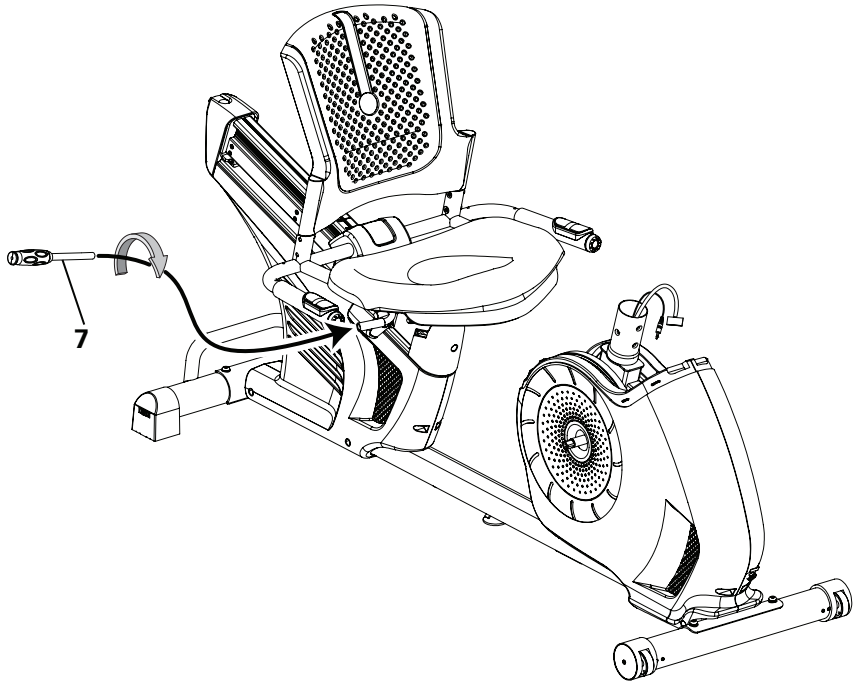

6. Connect the Cables and Attach the Console Mast to Frame Assembly

NOTICE: Do not crimp Console Cables.

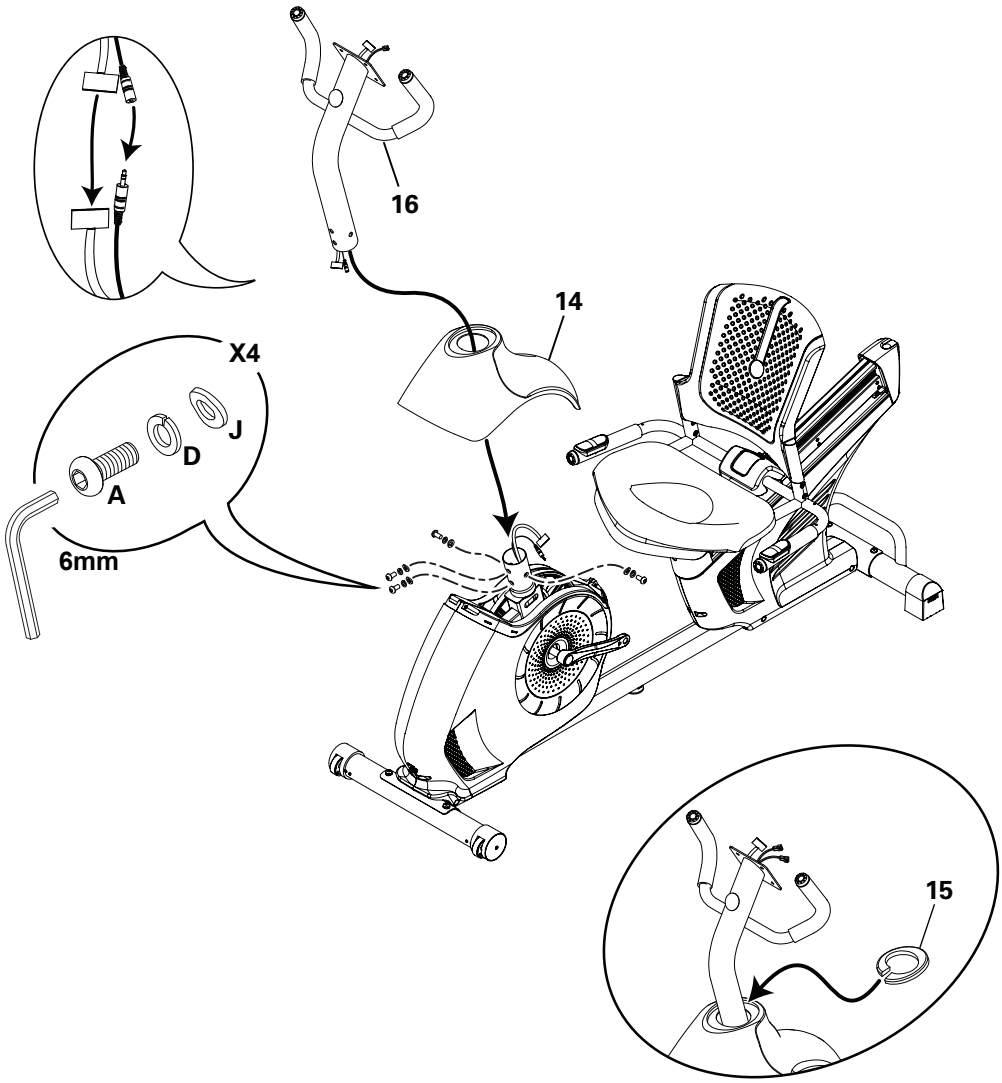

7. Remove Hardware from Console

NOTICE: Do not crimp the cable.

Note: Hardware is pre-installed and not on the Hardware Card. *

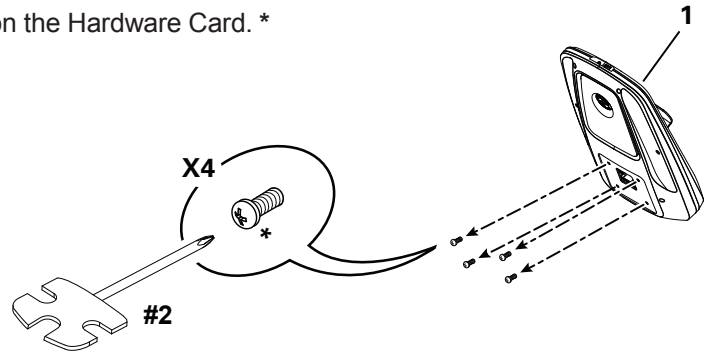

8. Connect Cables and Attach Console to Frame Assembly

NOTICE: Align the clips on the cable connectors and make sure the connectors lock. Do not crimp cables.

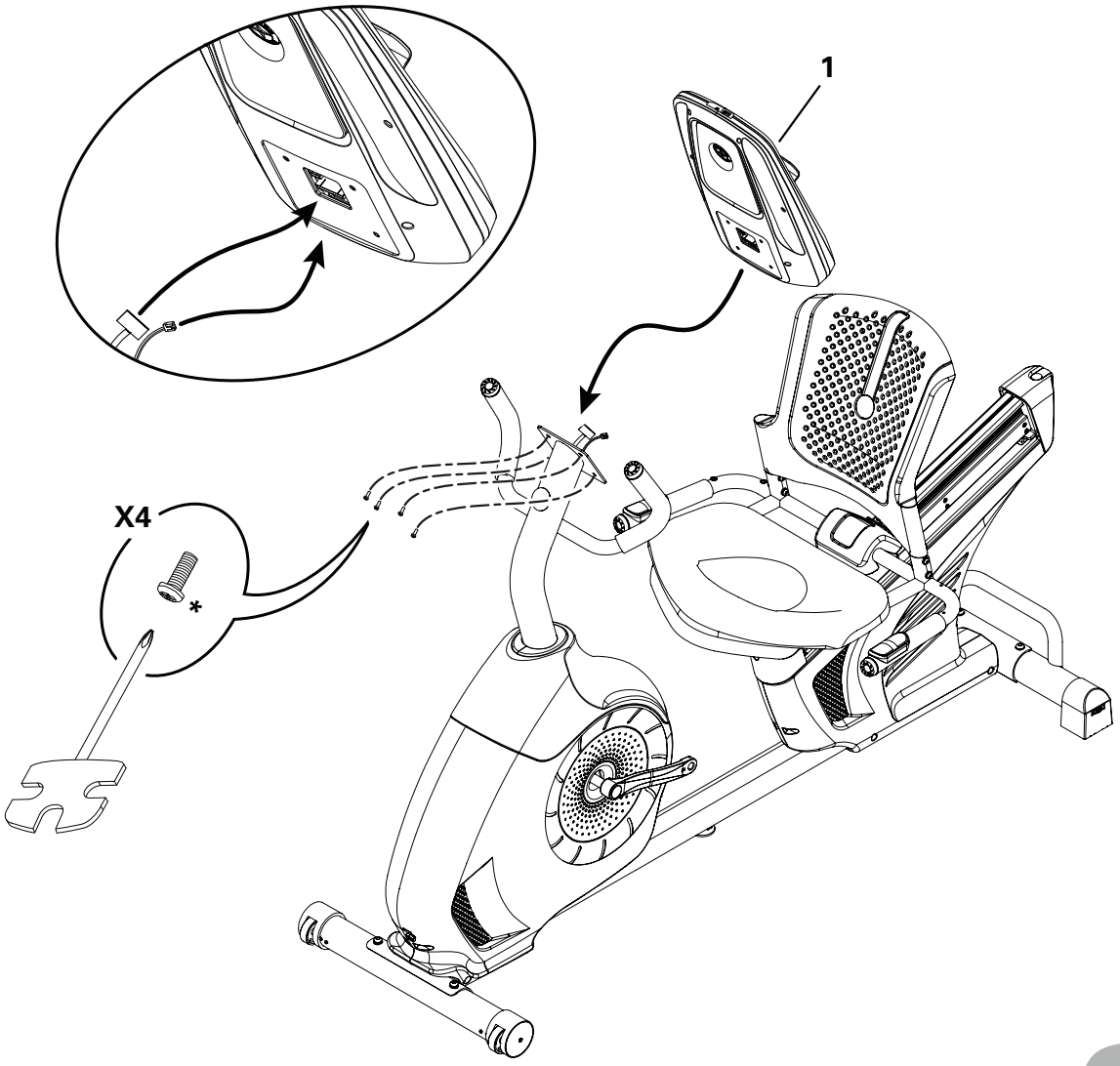

9. Attach Pedals to Frame Assembly

NOTICE: **The Left Pedal is reverse-threaded.** Be sure to attach Pedals on the proper side of the Bike. Orientation is based from a seated position on the bike. The Left Pedal has an “L”, the Right Pedal an “R”.

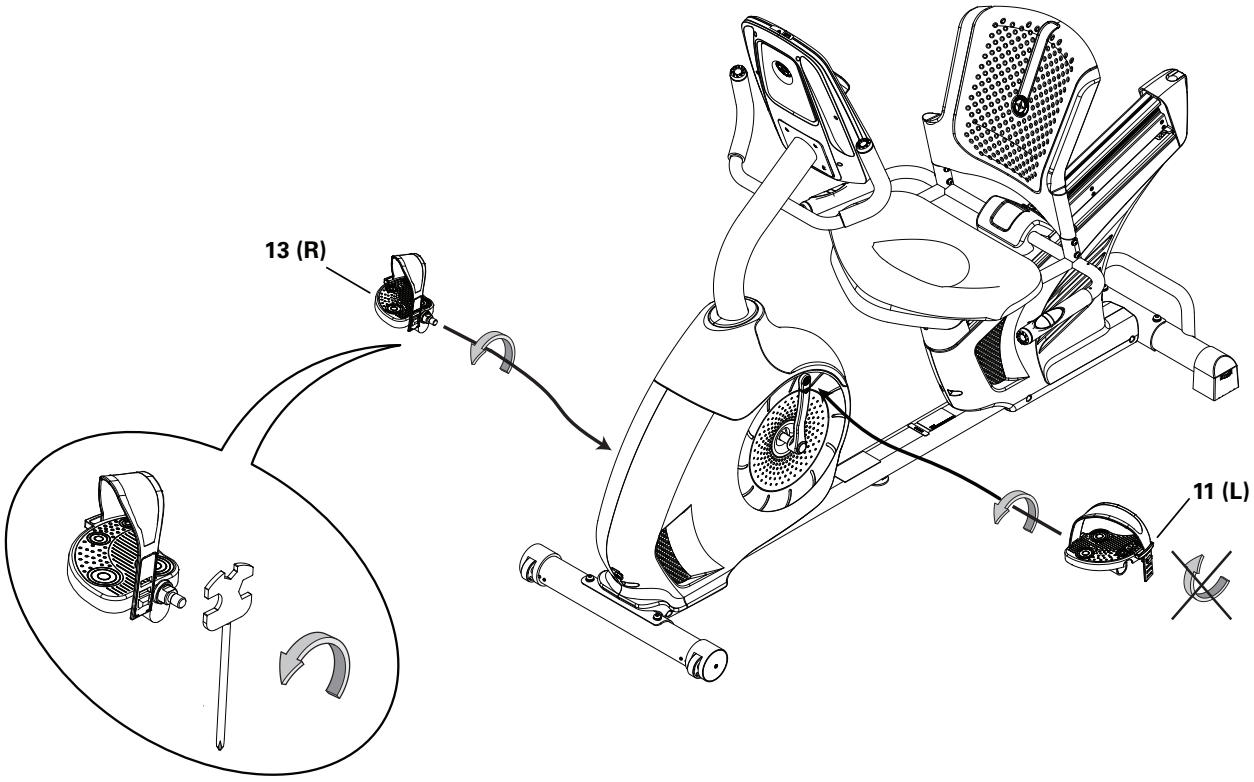

10. Attach Water Bottle Holder to Frame Assembly

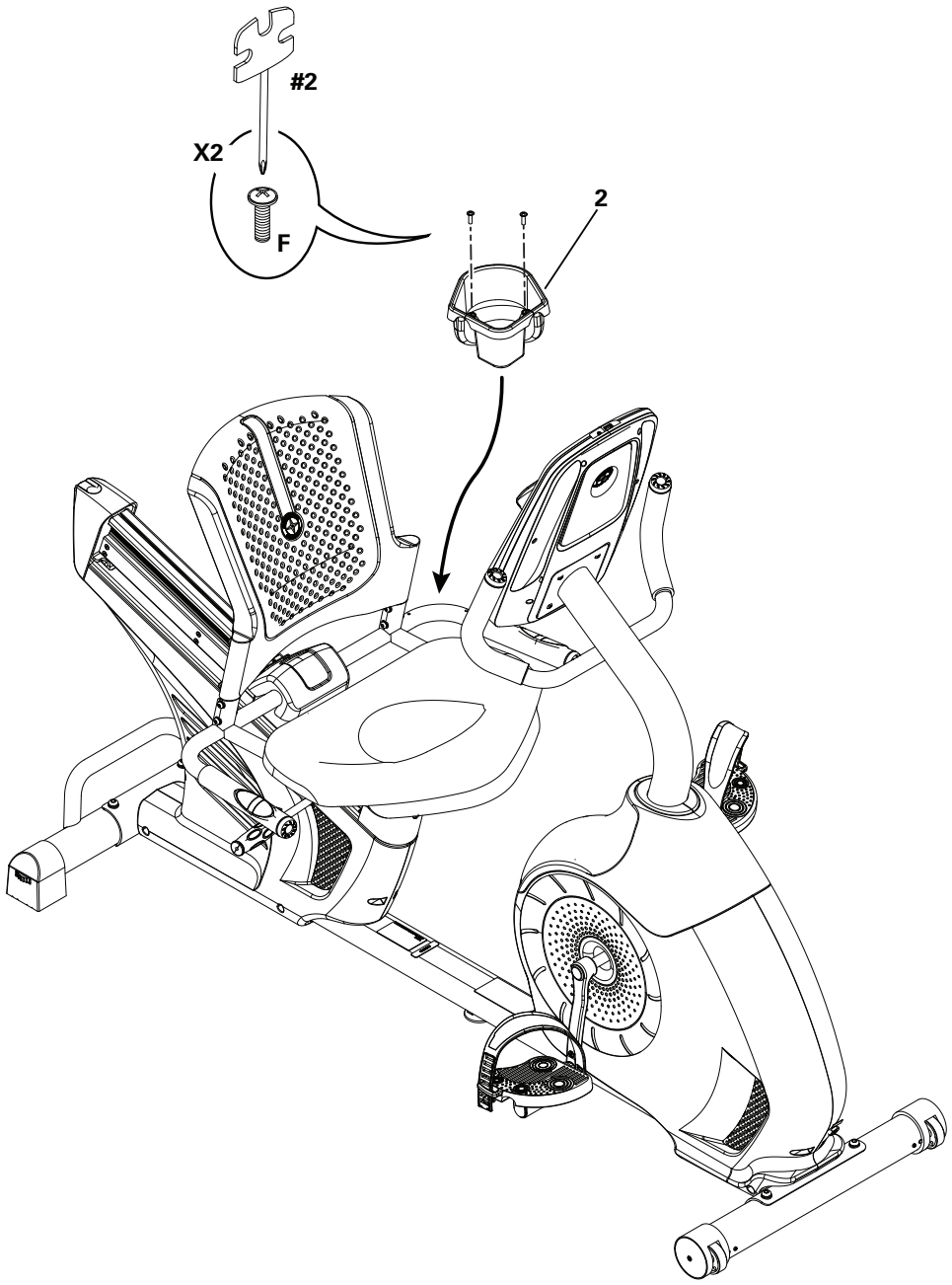

11. Connect AC Adapter to Frame Assembly

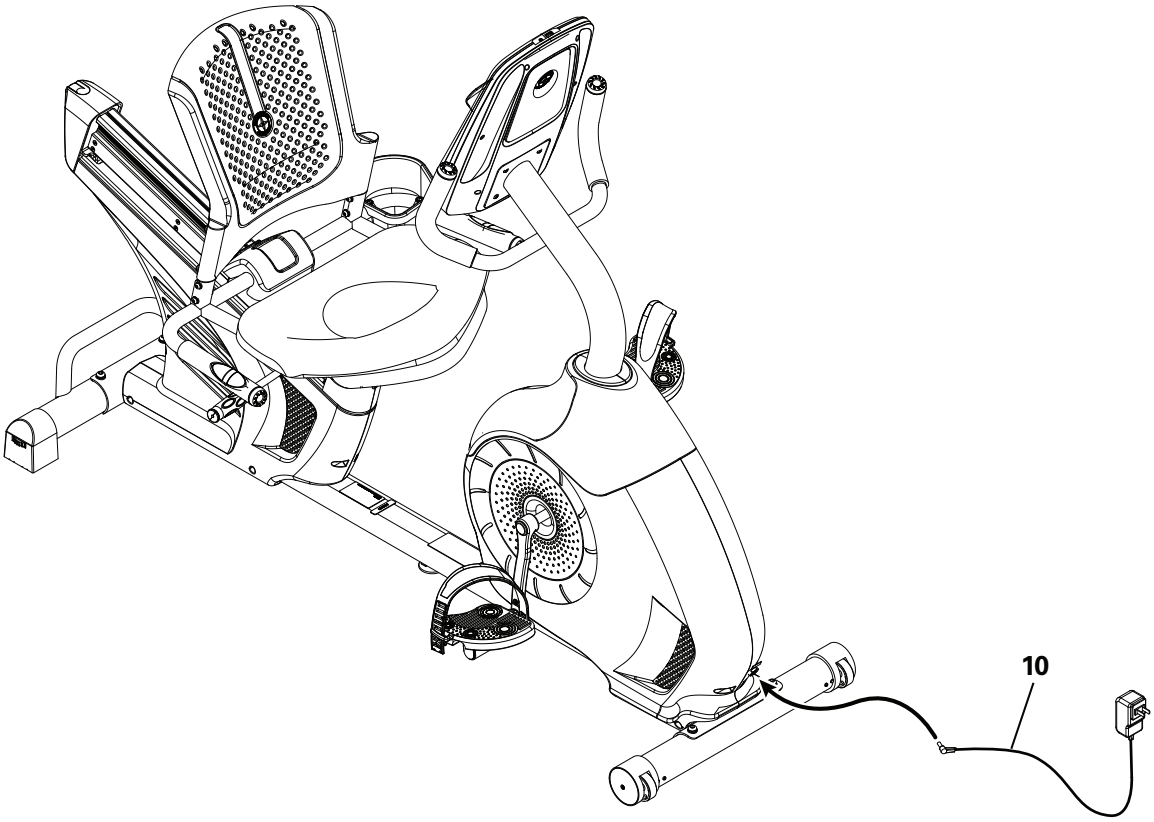

12. Final Inspection

Inspect your machine to ensure that all hardware is tight and components are properly assembled.

Be sure to record the serial number in the field provided at the front of this manual.

⚠ **Do not use or put the machine into service until the machine has been fully assembled and inspected for correct performance in accordance with the Owner's Manual.**

Moving the Machine

The machine may be moved by one or more persons depending on their physical abilities and capacities. Make sure that you and others are all physically fit and able to move the machine safely.

1. Remove the power cord.
2. Use the Transport Handle to carefully lift the machine onto the transport rollers.
3. Push the machine into position.
4. Carefully lower the machine into position.

NOTICE: Be careful when you move the bike. All abrupt motions can affect the computer operation.

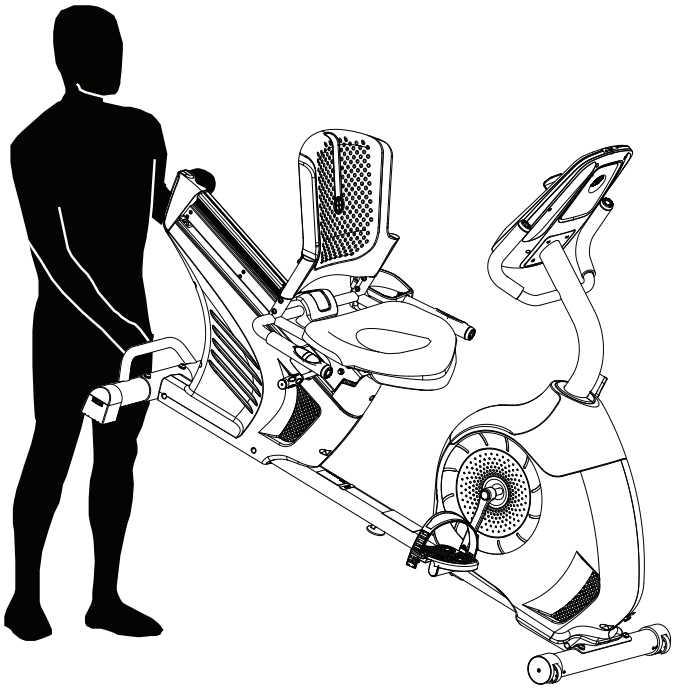

Leveling the Machine

Levelers are found on each side of the Rear Stabilizer and on the Frame Rail. On the Rear Stabilizer, turn the knob to adjust the stabilizer foot.

Do not adjust the levelers to such a height that they detach or unscrew from the machine. Injury to you or damage to the machine can occur.

To adjust the leveler on the Frame Rail:

1. Loosen the upper locking nut.
2. Turn the leveler to adjust the height.

Do not adjust the levelers to such a height that they detach or unscrew from the machine. Injury to you or damage to the machine can occur.

3. Tighten the upper locking nut to lock the leveler.

Make sure the bike is level and stable before you exercise.

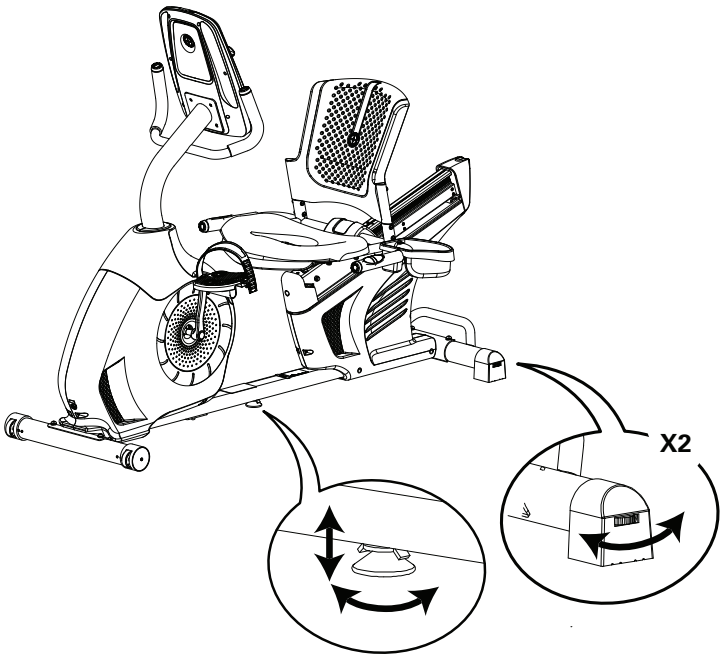

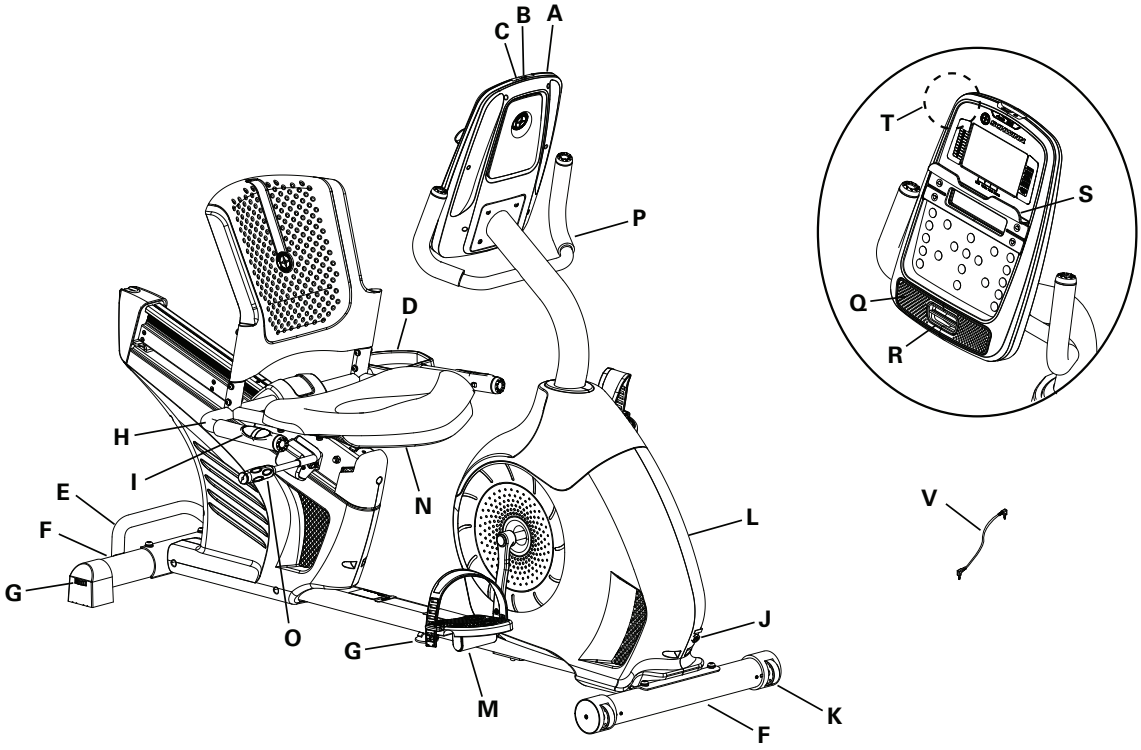

A	Console	L	Fully Shrouded Flywheel
B	MP3 Input	M	Pedal
C	USB Port	N	Adjustable Seat
D	Water Bottle Holder	O	Seat Adjustment Handle
E	Transport Handle	P	Handlebar, Upright
F	Stabilizer	Q	Speakers
G	Leveler	R	Fan
H	Handlebar, Side	S	Media Tray
I	Contact Heart Rate (CHR) Sensors	T	Telemetry Heart Rate (HR) Receiver
J	Power Connector	U	Bluetooth® Connectivity (not shown)
K	Transport Wheel	V	Media Cable

WARNING! Use the values calculated or measured by the machine's computer for reference purposes only. The heart rate displayed is an approximation and should be used for reference only. Over exercising may result in serious injury or death. If you feel faint stop exercising immediately.

Console Features

The Console provides important information about your workout and lets you control the resistance levels while you exercise. The Console features the Schwinn Dual Track™ display with touch control buttons to navigate you through the exercise programs.

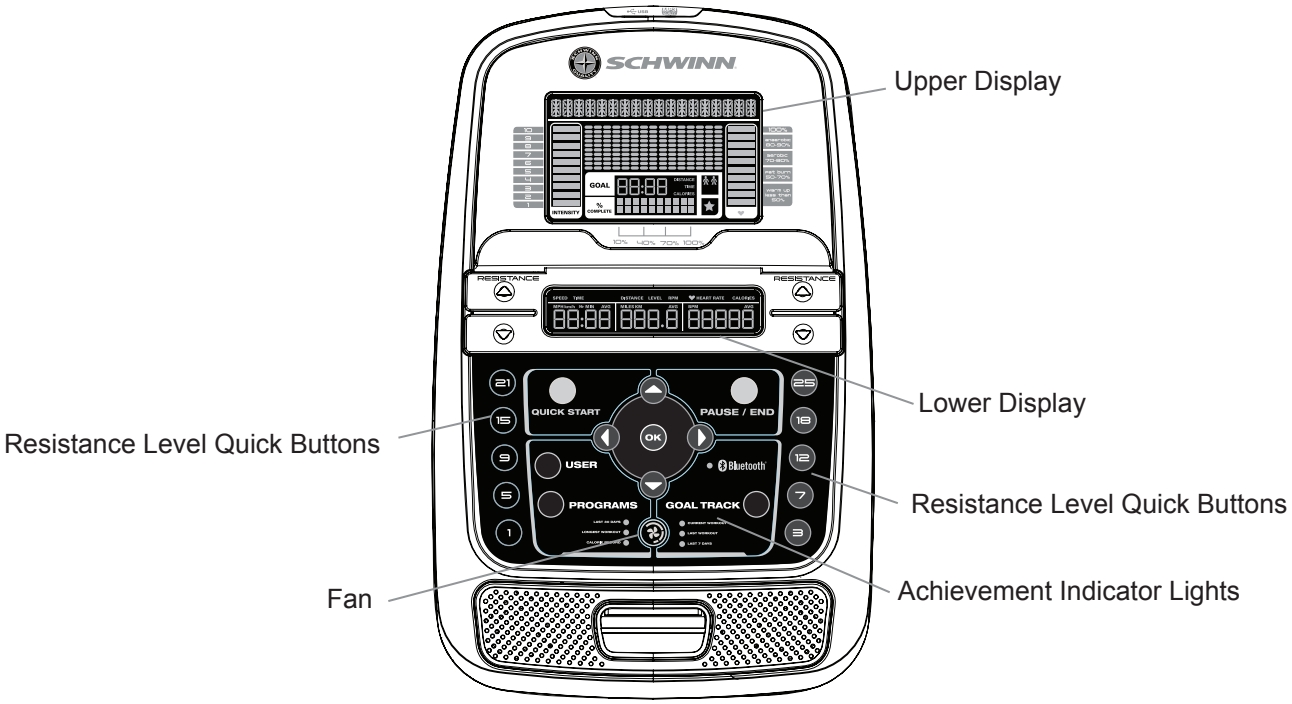

Keypad Functions

Resistance Increase (▲) button- Increases the workout resistance level

Resistance Decrease (▼) button- Decreases the workout resistance level

QUICK START button- Begins a Quick Start workout

USER button- Selects a User profile

PROGRAMS button- Selects a category and workout program

PAUSE / END button- Pauses an active workout, ends a paused workout, or goes back to the previous screen

GOAL TRACK button-Displays the Workout Totals and Achievements for the selected User Profile

Increase (▲) button- Increases a value (age, time, distance, or calories) or moves through options

Left (◄) button- Displays different workout values during a workout, and moves through options

OK button- Starts a Program workout, confirms information, or resumes a paused workout.

Right (►) button- Displays different workout values during a workout, and moves through options

Decrease (▼) button- Decreases a value (age, time, distance, or calories) or moves through options

FAN button- Controls 3-speed fan

Resistance Level Quick Buttons- Shifts the resistance levels to the setting quickly during a workout

Achievement Indicator Lights- when an achievement level is reached or a result is reviewed, the achievement indicator light will activate.

Schwinn Dual Track™ Display

Upper Display Data

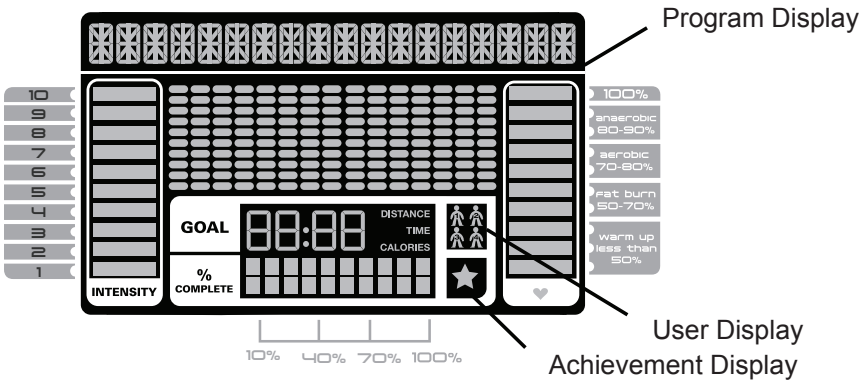

Program Display
The Program Display shows information to the User and the grid display area shows the course profile for the program. Each column in the profile shows one interval (workout segment). The higher the column, the higher the resistance level. The flashing column shows your current interval.

Intensity Display
The Intensity Display shows the level of work at that moment based on the current resistance level.

Heart Rate Zone Display
The Heart Rate Zone shows which zone the current heart rate value falls into for the current User. These Heart Rate Zones can be used as a workout guide for a certain target zone (anaerobic, aerobic, or fat burn).

Consult a physician before you start an exercise program. Stop exercising if you feel pain or tightness in your chest, become short of breath, or feel faint. Contact your doctor before you use the machine again. The heart rate displayed is an approximation and should be used for reference only.

Note: If no heart rate is detected, the display will be blank.

NOTICE: To prevent interference with the telemetry HR receiver, do not place any personal electronic devices in the left side of the media tray.

Goal Display
The Goal Display shows the currently selected type of goal (Distance, Time or Calories), the current value to achieve the goal, and the percent completed toward the goal.

User Display
The User Display shows which User Profile is currently selected.

Achievement Display
The Achievement Display activates when a workout goal is reached or a workout milestone is surpassed from past workouts. The Console display will congratulate and inform the User of their achievement, along with a celebratory sound.

Lower Display Data

The Lower Display shows the Workout Values. and can be customized for each User (Consult the “Edit User Profile” section of this manual).

Speed
The Speed display field shows the machine speed in miles per hour (mph) or kilometers per hour (km/h).

Time
The TIME display field shows the total time count of the workout, the average Time for the User Profile, or the total operational time of the machine.

Note: If a Quick Start workout is performed for more than 99 minutes and 59 seconds (99:59), the units for Time will shift to hours and minutes (1 hour, 40 minutes).

Distance
The Distance display shows the distance count (miles or km) in the workout.

Note: To change the measurement units to English Imperial or metric, refer to the “Console Setup Mode” section in this manual.

Level
The LEVEL display shows the current resistance level in the workout.

RPM
The RPM display field shows the pedal revolutions per minute (RPM).

Heart Rate (Pulse)
The Heart Rate display shows the beats per minute (BPM) from the heart rate monitor. When a heart rate signal is received by the Console, the icon will flash.

Consult a physician before you start an exercise program. Stop exercising if you feel pain or tightness in your chest, become short of breath, or feel faint. Contact your doctor before you use the machine again. The heart rate displayed is an approximation and should be used for reference only.

Calories
The Calories display field shows the estimated calories that you have burned during the exercise.

Bluetooth® Connectivity with the "Schwinn Trainer™" Fitness App

This fitness machine is equipped with Bluetooth® connectivity and can wirelessly sync with the "Schwinn Trainer™" Fitness App on supported devices. The Software App syncs with your fitness machine to track total calories burned, time, distance, and more. It records and stores every workout for quick reference. Plus, it automatically syncs your workout data with MyFitnessPal®, and Under Armour® Connected Fitness to make hitting your daily calorie goal easier than ever! Track your results and share with friends and family.

1. Download the free Software App, named Schwinn Trainer™. The software app is available on iTunes® and Google Play™.

   Note: For a complete list of supported devices, review the software app on iTunes® or Google Play™.

2. Follow the instructions on the Software App to sync your device to your exercise machine.
3. To sync your workout data with MyFitnessPal® or Under Armour® Connected Fitness, click on the desired program and login with your information.

   Note: The "Schwinn Trainer™" Fitness App will automatically sync your workouts after the initial syncing.

Workout with Other Fitness Apps

This fitness machine has integrated Bluetooth® connectivity which allows it to work with a number of digital partners. For our latest list of supported partners, please visit: **www.nautilus.com/partners**

USB Charging

If a USB Device is attached to the USB Port, the Port will attempt to charge the Device. The power supplied from the USB Port may not be enough to operate the Device and charge it at the same time.

Virtual Reality experience on your fitness machine

This fitness machine is equipped to support a Virtual Reality (VR) experience on supported devices.

Review, understand, and follow all warning instructions and the correct operation as supplied with your Virtual Reality equipment.

No one under the age of 13 should use this exercise equipment or the Virtual Reality experience.

Before starting a workout with the Virtual Reality experience, be sure the workout area is and will be clear throughout the workout, and that all persons or pets are restricted from the workout area. If necessary, a second person should be used to help secure the area.

The VR experience produces an immersive virtual reality experience that distracts and blocks the view of the actual surroundings. For the safest experience, only use the VR experience when operating the fitness equipment in the seated position. Do not start the VR experience until seated and ready to start a workout. Be sure the area is secure and that the workout area is safe from potential harm and clear of all obstacles within reach. Damage to you or items in the workout area could result during a VR workout. Stay seated on the exercise equipment until the VR gear has been removed and the actual surroundings are viewable.

If dizziness or motion sickness is experienced from the Virtual Reality experience, safely balance yourself and stop the Virtual Reality experience as soon as possible. Coordination and balance is required when using the VR experience with the exercise machine.

Consult with a doctor before using the VR experience if you have any conditions which may be affected by an immersive Virtual Reality experience, such as epilepsy, pregnant, elderly, psychotic disorders, vision abnormalities, heart conditions, or any other medical condition.

Remote Heart Rate Monitor

Monitoring your Heart Rate is one of the best procedures to control the intensity of your exercise. Contact Heart Rate (CHR) sensors are installed to send your heart rate signals to the Console. The Console can also read telemetry HR signals from a Heart Rate Chest Strap Transmitter that operates in the 4.5kHz - 5.5kHz range.

Note: The heart rate chest strap must be an uncoded heart rate strap from Polar Electro or an uncoded POLAR® compatible model. (Coded POLAR® heart rate straps such as POLAR® OwnCode® chest straps will not work with this equipment.)

If you have a pacemaker or other implanted electronic device, consult your doctor before using a wireless chest strap or other telemetric heart rate monitor.

NOTICE: To prevent interference with the telemetry HR receiver, do not place any personal electronic devices in the left side of the media tray.

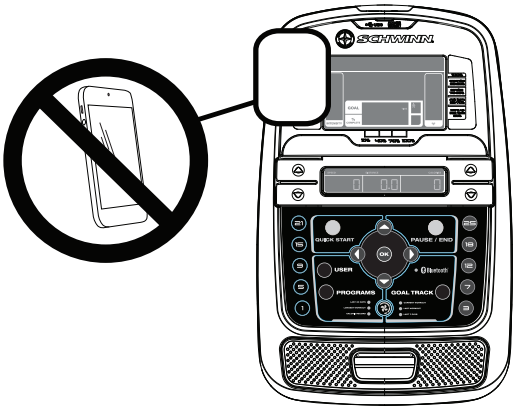

Contact Heart Rate Sensors

Contact Heart Rate (CHR) sensors send your heart rate signals to the Console. The CHR sensors are the stainless steel parts of the Handlebars. To use, put your hands comfortably around the sensors. Be sure that your hands touch both the top and the bottom of the sensors. Hold firm, but not too tight or loose. Both hands must make contact with the sensors for the Console to detect a pulse. After the Console detects four stable pulse signals, your initial pulse rate will be shown.

Once the Console has your initial heart rate, do not move or shift your hands for 10 to 15 seconds. The Console will now validate the heart rate. Many factors influence the ability of the sensors to detect your heart rate signal:

- Movement of the upper body muscles (including arms) produces an electrical signal (muscle artifact) that can interfere with pulse detection. Slight hand movement while in contact with the sensors can also produce interference.
- Calluses and hand lotion may act as an insulating layer to reduce the signal strength.
- Some Electrocardiogram (EKG) signals generated by individuals are not strong enough to be detected by the sensors.
- The proximity of other electronic machines can generate interference.

If your heart rate signal ever seems erratic after validation, wipe off your hands and the sensors and try again.

Heart Rate Calculations

Your maximum heart rate usually decreases from 220 Beats Per Minute (BPM) in childhood to approximately 160 BPM by age 60. This fall in heart rate is usually linear, decreasing by approximately one BPM for each year. There is no indication that training influences the decrease in maximum heart rate. Individuals of the same age could have different maximum heart rates. It is more accurate to find this value by completing a stress test than by using an age related formula.

Your at-rest heart rate is influenced by endurance training. The typical adult has an at rest heart rate of approximately 72 BPM, whereas highly trained runners may have readings of 40 BPM or lower.

The Heart Rate table is an estimate of what Heart Rate Zone (HRZ) is effective to burn fat and improve your cardiovascular system. Physical conditions vary, therefore your individual HRZ could be several beats higher or lower than what is shown.

The most efficient procedure to burn fat during exercise is to start at a slow pace and gradually increase your intensity until your heart rate reaches between 60 – 85% of your maximum heart rate. Continue at that pace, keeping your heart rate in that target zone for over 20 minutes. The longer you maintain your target heart rate, the more fat your body will burn.

The graph is a brief guideline, describing the generally suggested target heart rates based on age. As noted above, your optimal target rate may be higher or lower. Consult your physician for your individual target heart rate zone.

Note: As with all exercises and fitness regimens, always use your best judgment when you increase your exercise time or intensity.

FAT-BURNING TARGET HEART RATE

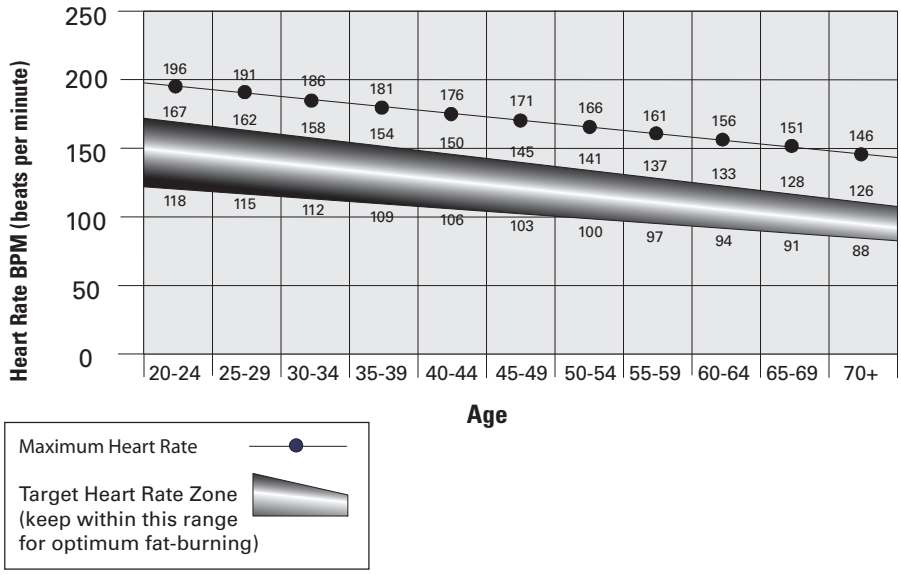

What to Wear
Wear rubber-soled athletic shoes. You will need the appropriate clothes for exercise that allow you to move freely.

How Often Should You Exercise

⚠ **Consult a physician before you start an exercise program. Stop exercising if you feel pain or tightness in your chest, become short of breath, or feel faint. Contact your doctor before you use the machine again. Use the values calculated or measured by the machine's computer for reference purposes only. The heart rate displayed on the console is an approximation and should be used for reference only.**

- 3 times a week for 30 minutes each day.
- Schedule workouts in advance and try to follow the schedule.

Seat Adjustment
Correct seat placement encourages exercise efficiency and comfort, while reducing the risk of injury.

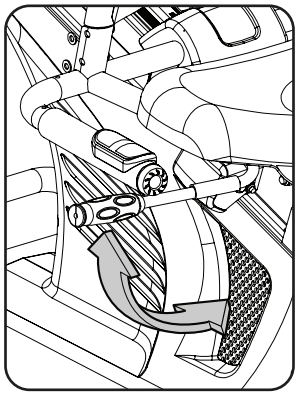

1. With a Pedal in the forward position, place the ball of your foot over the center of it. Your leg should be bent slightly at the knee.
2. If your leg is too straight or your foot cannot touch the Pedal, move the seat forward. If your leg is bent too much, move the seat toward the back.

⚠ **Step off the bike before you adjust the seat.**

3. Push down on the Seat Adjustment Handle, and adjust the seat to the desired height.
4. Pull up the Seat Adjustment Handle to engage the locking mechanism. Be sure that the handle is fully engaged.

Foot Position / Pedal Strap Adjustment
Foot pedals with straps provide secure footing to the exercise bike.

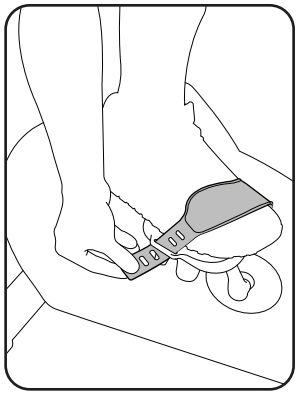

1. Rotate the Pedals until one can be reached.
2. Put the ball of each foot on the Pedals.
3. Fasten the strap over the shoe.
4. Repeat for the other foot.

Be sure toes and knees point directly forward to ensure maximum Pedal efficiency. Pedal straps can be left in position for subsequent workouts.

Power-Up / Idle Mode
The Console will enter Power-Up / Idle Mode if it is plugged into a power source, any button is pushed, or if it receives a signal from the RPM sensor as a result of pedaling the machine.

Auto Shut-Off (Sleep Mode)
If the Console does not receive any input in approximately 5 minutes, it will automatically shut off. The LCD display is off while in Sleep Mode.

Note: The Console does not have an On/Off switch.

Initial Setup

During the first power-up, the Console should be setup with the date, time and your preferred measurement units.

1. Date: Push the Increase/Decrease buttons to adjust the currently active value (flashing). Push the Left/Right buttons to change which segment is the currently active value (month / day / year).
2. Push OK to set.
3. Time: Push the Increase/Decrease buttons to adjust the currently active value (flashing). Push the Left/Right buttons to change which segment is the currently active value (hour / minute / AM or PM).
4. Push OK to set.
5. Units of Measurement: Push the Increase/Decrease buttons to adjust between “MILES” (Imperial English) or “KM” (metric).
6. Push OK to set. The Console goes back to the Power-Up / Idle Mode screen.

Note: To adjust these selections, consult the “Console Set-Up Mode” section.

Quick Start (Manual) Program

The Quick Start (Manual) program lets you start a workout without entering any information.

During a Manual Workout, each column represents a 2 minute time period. The active column will advance across the screen every 2 minutes. If the workout lasts for more than 30 minutes, the active column is fixed on the farthest column on the right and pushes the previous columns off the display.

1. Sit on the machine.
2. Push the Increase/Decrease button to select the correct User profile. If you do not have a User profile set up, you can select a User profile that has no customized data (default values only).
3. Push the QUICK START button to start the Manual program.
4. To change the resistance level, push the Resistance Increase/Decrease buttons. The current interval and future intervals are set to the new level. The default Manual resistance level is 4. The time will count up from 00:00.

   Note: If a Manual workout is performed for more than 99 minutes and 59 seconds (99:59), the units for Time will shift to hours and minutes (1 hour, 40 minutes).

5. When done with your workout, stop pedaling and push PAUSE/END to pause the workout. Push PAUSE/END again to end the workout.

   Note: The workout results are recorded to the current User Profile.

User Profiles

The Console lets you store and use 4 User profiles. The User profiles automatically record the workout results for each workout, and allow the workout data to be reviewed.

The User profile stores the following data:

- Name—up to 10 characters
- Age
- Weight
- Height
- Gender
- Preferred Workout Values

Select a User Profile

Every workout is saved to a User Profile. Be sure to select the proper User Profile before starting a workout. The last User that completed a workout will be the default user.

User Profiles are assigned the default values until they are customized by editing. Be sure to edit the User Profile for more accurate calorie and heart rate information.

From the Power-Up Mode screen, push the User Button to select one of the User Profiles. The Console will display the name of the User Profile and the User Profile Icon.

Edit User Profile

1. From the Power-Up Mode screen, push the User Button to select one of the User Profiles.
2. Push the OK button to select the User Profile.
3. The Console display shows the EDIT prompt and the current User Profile name. Push OK to start the Edit User Profile option.

   To exit the Edit User Profile option, push the PAUSE/END button and the console will go back to the Power-Up Mode screen.
4. The Console display shows the NAME prompt and the current User Profile name.

   Note: The User name will be blank if this is the first edit. The name of a User Profile is limited to 10 characters.

   The currently active segment will flash. Use the Increase/Decrease buttons to move through the alphabet and blank space (found between A and Z). To set each segment, use the Left(◄) or Right(►) buttons to shift between segments.

   Push the OK button to accept the displayed User name.
5. To edit the other User data (EDIT AGE, EDIT WEIGHT, EDIT HEIGHT, EDIT GENDER), use the Increase/Decrease buttons to adjust, and push OK to set each entry.
6. The Console display shows the SCAN prompt. This option controls how the workout values are displayed in the Lower Display during a workout. The “OFF” setting allows the user to push the RIGHT or LEFT buttons to view the other workout value channels when desired. The “ON” setting allows the Console to automatically display the workout value channels every 6 seconds.

   The default is “OFF”.

   Push the OK button to set how the workout values are displayed.
7. The Console display shows the WIRELESS HR prompt. If you are using the Console speakers at their higher settings and / or using a larger sized personal electronic device, the Console may show Heart Rate interference. This option allows the Telemetry Heart Rate Receiver to be deactivated blocking the interference.

   The Upper Display shows the current value setting: “ON” or “OFF”. Push the Increase(▲) or Decrease(▼) buttons to change the value.

   The default is “ON”.

   Push the OK button to set the Telemetry Heart Rate Receiver to active.
8. The Console display shows the EDIT LOWER DISPLAY prompt. This option allows you to customize which Workout Values are displayed during a workout.

   The Lower Display will show all of the workout values, with the active Workout Value flashing. The Upper Display shows the active value setting: “ON” or “OFF”. Push the Increase(▲) or Decrease(▼) buttons to hide the active workout value, and push the Left(◄) or Right(►) buttons to shift the active workout value.

   NOTE: to show a hidden workout value, repeat procedure and change Upper Display value to “ON” for that value.

   When done with customizing the Lower Display, push the OK button to set it.

9. The Console will go to the Power-Up Mode screen with the user selected.

Reset a User Profile

1. From the Power-Up Mode screen, push the User Button to select one of the User Profiles.
2. Push the OK button to select the User Profile.
3. The Console display shows the current User Profile name and the EDIT prompt. Push the Increase(▲) or Decrease(▼) buttons to change the prompt.

   Note: To exit the Edit User Profile option, push the PAUSE/END button and the console will go back to the Power-Up Mode screen.
4. The Console display shows the RESET prompt and the current User Profile name. Push OK to start the Reset User Profile option.
5. The Console will now confirm the request to reset the User profile (the default selection is 'NO'). Push the Increase(▲) or Decrease(▼) buttons to adjust the selection.
6. Push OK to make your selection.
7. The Console will go to the Power-Up Mode screen.

Changing Resistance Levels

Push the Resistance Level Increase(▲) or Decrease(▼) buttons to change the resistance level at any time in a workout program. To rapidly change the resistance level, push the desired Resistance Level Quick Button. The Console will adjust to the selected resistance level of the quick button.

Profile Programs

These programs automate different resistance and workout levels. The Profile Programs are organized into Categories (Fun Rides, Mountains, and Challenges).

Note: Once a User views all the Categories, they will be expanded to display the Programs within each of the Categories.

FUN RIDES

Rolling Hills

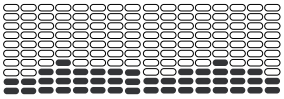

Ride in the Park

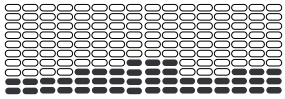

Easy Tour

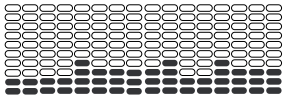

Stream Crossing

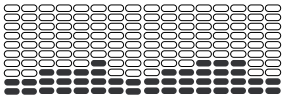

MOUNTAINS

Pike's Peak

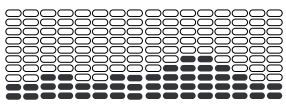

Mount Hood

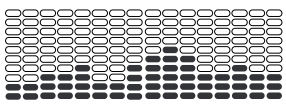

Pyramids

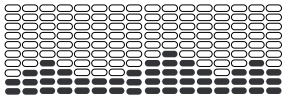

Summit Pass

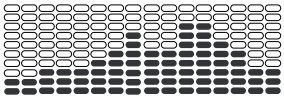

CHALLENGES

Uphill Finish

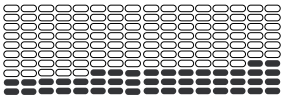

Cross-Training

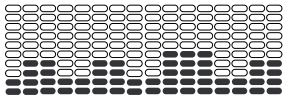

Interval

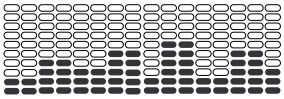

Stairs

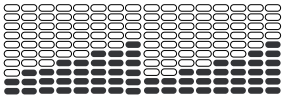

Workout Profile and Goal Program

The Console lets you select the Profile Program and type of Goal for your workout (Distance, Time or Calories), and set the Goal value.

1. Sit on the machine.
2. Push the User Button to select the correct User profile.
3. Push the Programs button.
4. Push the Left(◄) or Right(►) buttons to select a Category of Workout.
5. Push the Increase(▲) or Decrease(▼) buttons to select a Profile Workout, and push OK.
6. Use the Increase(▲) or Decrease(▼) buttons to select a type of Goal (Distance, Time or Calories), and push OK.
7. Use the Increase(▲) or Decrease(▼) buttons to adjust the workout value.
8. Push OK to begin the goal-oriented workout. The GOAL value will count down as the value for percent completed increases.

Note: During a Calories Goal, each column is for a 2 minute time period. The active column will advance across the screen every 2 minutes. If the workout lasts for more than 30 minutes, the active column will fix to the last right column and push the previous columns off the display.

Fitness Test Program

The Fitness Test measures the improvements of your physical fitness level. The test compares your power output (in Watts) to your heart rate. As your fitness level improves, your power output will increase at a given heart rate.

Note: The Console must be able to read the heart rate information from the Contact Heart Rate (CHR) sensors or Heart Rate Monitor (HRM) to work correctly.

You can start the Fitness Test from the FEEDBACK category. The Fitness Test program first prompts you to select your fitness level—Beginner (“BEG”) or Advanced (“ADV”). The Console will use the Age and Weight values for the selected User Profile to calculate the Fitness Score.

Start to workout and hold the Heart Rate Sensors. When the test starts, the intensity of the workout slowly increases. This means you will work harder, and as a result, your heart rate increases. The intensity continues to increase automatically

until your heart rate reaches the “Test Zone”. This zone is individually computed to be near 75 percent of the maximum heart rate of your User Profile. When you reach the Test Zone, the machine holds the intensity steady for 3 minutes. This lets you reach a stable condition (where your heart rate becomes steady). At the end of the 3 minutes, the Console measures your heart rate and the power output. These numbers, along with information about your age and weight, are computed to produce a “Fitness Score”.

Note: Fitness Test scores should only be compared to your previous scores and not to other User Profiles.

Compare your Fitness Scores to see your improvement.

Recovery Test Program

Recovery Test shows how quickly your heart recovers from an exercise state to a more restful state. Improved recovery is an indicator of increasing fitness.

Note: The Console must be able to read the heart rate information from the Contact Heart Rate (CHR) sensors or Heart Rate Monitor (HRM) to work correctly.

From an elevated heart rate, select the Recovery Test Program. The Console will show “STOP EXERCISING” and the goal will begin to count down. Stop exercising but continue to grip the contact heart rate sensors. After 5 seconds, the display will show “RELAX” and will continue to count down to 00:00. For the entire minute the console will also show your heart rate. You must grip the heart rate sensors for the duration of the test if not using a Remote Heart Rate Monitor.

The display will continue to show “RELAX” and your heart rate until the goal reaches 00:00. The console will then calculate your recovery score.

Recovery Score = Your heart rate at 1:00 (the beginning of the test) minus your heart rate at 00:00 (the end of the test).

The higher the Recovery Test score value, the quicker your heart rate is returning to a more restful state and is an indication of improving fitness. By recording these values over time you can see the trend toward better health.

When you select the Recovery Test Program and there is no heart rate signal or display, the Console will show “NEED HEART RATE”. This message will show for 5 seconds. If no signal is detected, the program will end.

Helpful Tip: For a more relevant score, try to obtain a steady heart rate for 3 minutes before starting the Recovery Program. This will be easier to achieve, and obtain the best result, in the Manual program so you can control the levels of resistance.

Heart Rate Control (HRC) Workout Programs

The Heart Rate Control (HRC) programs let you set a heart rate goal for your workout. The program monitors your heart rate in beats per minute (BPM) from the Contact Heart Rate (CHR) sensors on the machine or from a Heart Rate Monitor (HRM) chest strap, and adjusts the workout to keep your heart rate in the selected zone.

Note: The console must be able to read the heart rate information from the CHR sensors or HRM for the HRC program to work correctly.

The Target Heart Rate programs use your age and other User information to set the Heart Rate Zone values for your workout. The console display then gives prompts for you to set up your workout:

1. Select the Heart Rate Control workout level: BEGINNER (“BEG”) or ADVANCED (“ADV”) and push OK.
2. Push the Increase(▲) or Decrease(▼) buttons to select the percentage of maximum heart rate: 50–60%, 60–70%, 70–80%, 80–90%.

Consult a physician before you start an exercise program. Stop exercising if you feel pain or tightness in your chest, become short of breath, or feel faint. Contact your doctor before you use the machine again. Use the values calculated or measured by the machine’s computer for reference purposes only. The heart rate displayed on the console is an approximation and should be used for reference only.

3. Push the Increase(▲) or Decrease(▼) buttons to select the Goal type, and push OK.
4. Push the Increase(▲) or Decrease(▼) buttons to set the goal value for the workout.

   Note: Be sure to allow time for your heart rate to reach the desired heart rate zone when setting the goal.
5. Push OK to start the workout.

A User can set a Heart Rate zone instead of a value by selecting the Heart Rate Control - User program. The Console will adjust the workout to keep the User in the desired Heart Rate zone.

1. Select HEART RATE CONTROL - USER, and push OK.
2. Push the Increase(▲) or Decrease(▼) buttons to set the Heart Rate zone for the workout, and push OK. The Console shows the Heart Rate zone (percent) on the left, and the Heart Rate range for the User on the right side of the display.

3. Push the Increase(▲) or Decrease(▼) buttons to select the Goal type, and push OK.
4. Push the Increase(▲) or Decrease(▼) buttons to set the value for the workout.
5. Push OK to start the workout.

Custom Program

The Custom Program lets you set the resistance level for each interval and select type of Goal (Distance, Time or Calories) to create a personalized workout. One custom workout is available for each User Profile.

1. Sit on the machine.
2. Push the User button to select the correct User profile.
3. Push the Programs button.
4. Push the Increase(▲) or Decrease(▼) buttons to select Custom Program, and push OK.
5. The Console shows Heart Rate Control. To select Heart Rate Control, push OK.

   To continue in the Custom Program, push the Left button and the Console shows Custom Program again. Push OK.
6. To edit the Custom Program, use the Right(►) button to move to the next interval and use the Increase(▲) or Decrease(▼) buttons to adjust the resistance values. Push the OK button to accept the displayed values.
7. Use the Increase(▲) or Decrease(▼) buttons to select a type of Goal (Distance, Time or Calories), and push OK.
8. Use the Increase(▲) or Decrease(▼) buttons to adjust the workout value.
9. Push OK to start the workout. The GOAL value will count down as the value for percent completed increases.

Changing a Workout Program During a Workout

The Console allows a different Workout Program to be started from an active workout.

1. From an active workout, push PROGRAMS.
2. Push the Increase(▲) or Decrease(▼) buttons to select the desired workout program, and push OK.
3. Push the Increase(▲) or Decrease(▼) buttons to select the Goal type, and push OK.
4. Push the Increase(▲) or Decrease(▼) buttons to set the value for the workout.
5. Push OK to stop the active workout and start the new workout.

The previous workout values are saved to the User Profile.

Pausing or Stopping

The Console will go into Pause Mode if the user stops pedaling and pushes PAUSE/END during a workout, or there is no RPM signal for 5 seconds (user not pedaling). The Console will cycle through a series of messages that change every 4 seconds:

- WORKOUT PAUSED
- PEDAL TO CONTINUE (if a bike) / STRIDE TO CONTINUE (if an elliptical)
- PUSH END TO STOP

During a paused workout, you can use the Increase/Decrease buttons to move through the result channels manually.

1. Stop pedaling and push the PAUSE/END button to pause your workout.
2. To continue your workout, push OK or start pedaling.

   To stop the workout, push the PAUSE/END button. The Console will go into Results / Cool Down mode.

Results / Cool Down Mode

After a workout the GOAL display shows 03:00 and then starts to count down. During this Cool Down period, the Console shows the Workout Results. All workouts except Quick Start have a 3-minute Cool Down period.

The LCD display shows the Current Workout values in three channels:

a.) TIME (total), DISTANCE (total), and CALORIES (total)

b.) SPEED (average), RPM (average), and HEART RATE (average)

c.) TIME (average), LEVEL (average), and CALORIES (average).

Push the Left(◄) or Right(►) buttons to move through the result channels manually.

During the Cool Down period, the Resistance Level will adjust to a third of the average Level of the workout. The Cool Down resistance level can be adjusted with the Resistance Increase and Decrease buttons, but the Console will not display the value.

You can push PAUSE/END to stop the Results / Cool Down period and go back to Power-Up Mode. If there is no RPM or HR signal, the Console automatically goes into Sleep Mode.

GOAL TRACK Statistics (and Achievements)

The statistics from every workout are recorded to a User Profile.

The Schwinn Dual Track™ Console shows the Goal Track workout Statistics on the Lower Display in three channels:

a.) TIME (total), DISTANCE (total), and CALORIES (total)

b.) SPEED (average), RPM (average), and HEART RATE (average)

c.) TIME (average), DISTANCE (average) / or LEVEL (average) *****, and CALORIES (average)

***** If the Goal Track Statistic is a single workout, LEVEL (average) is displayed. If the Goal Track Statistic is a combination of multiple workouts, DISTANCE (average) is displayed instead of LEVEL (average).

To view the GOAL TRACK statistics of a User Profile:

1. From the Power-Up screen, push the User Button to select a User Profile.
2. Push the GOAL TRACK button. The Console will display the LAST WORKOUT values and activate the corresponding Achievement light.

Note: Goal Track statistics can be viewed even during a workout. Push GOAL TRACK and the LAST WORKOUT values will be displayed. The workout values for the current workout will be hidden except for the GOAL display. Push GOAL TRACK again to return to the Power-Up screen.

3. Push the Increase(▲) button to move to the next GOAL TRACK statistic, “LAST 7 DAYS”. The Console will display the calories burnt on the display (50 calories per segment) for the previous seven days, along with the workout value totals. Use the Left(◄) or Right(►) buttons to move through all the workout statistic channels.
4. Push the Increase(▲) button to move to “LAST 30 DAYS”. The Console will display the total values for the previous thirty days. Use the Left(◄) or Right(►) buttons to move through all the workout statistic channels.
5. Push the Increase(▲) button to move to the “LONGEST WORKOUT”. The Console will display the workout values with the most Time value. Use the Left(◄) or Right(►) buttons to move through all the workout statistic channels.
6. Push the Increase(▲) button to move to the “CALORIE RECORD”. The Console will display the workout values with the most Calories value. Use the Left(◄) or Right(►) buttons to move through all the workout statistic channels.
7. Push the Increase(▲) button to move to “BMI”, or Body Mass Index. The Console will display the BMI value based on the User settings. Be sure the height value is correct for your User Profile, and the weight value is current.

The BMI Measurement is a useful tool that shows the relationship between weight and height that is associated with body fat and health risk. The table below gives a general rating for the BMI score:

Underweight	Below 18.5
Normal	18.5 – 24.9
Overweight	25.0 – 29.9
Obesity	30.0 and above

Note: The rating may overestimate body fat in athletes and others who have a muscular build. It may also underestimate body fat in older persons and others who have lost muscle mass.

Contact your doctor for more information about Body Mass Index (BMI) and the weight that is appropriate for you. Use the values calculated or measured by the machine’s computer for reference purposes only.

8. Push the Increase(▲) button to move to the “SAVE TO USB - OK?” prompt. Push OK, and the “ARE YOU SURE? -NO” prompt will display. Push the Increase(▲) button to change it to yes and push OK. The Console will display the “INSERT USB” prompt. Insert a USB Flash Drive into the USB Port. The Console will record the Statistics to the USB Flash Drive.

   The Console will display “SAVING”, and then “REMOVE USB” when it is safe to remove the USB Flash Drive.

   Note: Push the PAUSE/END button to force an exit from the “SAVING” prompt.
9. Push the Increase(▲) button to move to the “CLEAR WORKOUT DATA -OK?”. Push OK, and the “ARE YOU SURE? - NO” prompt will display. Push the Increase(▲) button to change to the “ARE YOU SURE? - YES” display, and push OK. The user workouts have been reset.
10. Push GOAL TRACK to return to the Power-Up screen.

When a User performs a workout that surpasses the “LONGEST WORKOUT” or “CALORIE RECORD” of the previous workouts, the Console will congratulate with an audible sound and tell the User the new achievement. The corresponding Achievement Indicator Light will also be active.

The Console Setup Mode lets you input the date and time, set the units of measurement to either English or Metric, control the sound settings (on/ off), or see maintenance statistics (Error Log and Run Hours – for service technician use only).

1. Hold down the PAUSE/END button and Right button together for 3 seconds while in the Power-Up Mode to go into the Console Setup Mode.

   Note: Push PAUSE/END to exit the Console Setup Mode and return to the Power-Up Mode screen.

2. The Console display shows the Date prompt with the current setting. To change, push the Increase/Decrease buttons to adjust the currently active value (flashing). Push the Left/Right buttons to change which segment is the currently active value (month / day / year).
3. Push OK to set.
4. The Console display shows the Time prompt with the current setting. Push the Increase/Decrease buttons to adjust the currently active value (flashing). Push the Left/Right buttons to change which segment is the currently active value (hour / minute / AM or PM).
5. Push OK to set.
6. The Console display shows the Units prompt with the current setting. To change, push OK to start the Units option. Push the Increase/Decrease buttons to change between “MILES” (Imperial English units) and “KM” (metric units).

   Note: If the units change when there is data in User Statistics, the statistics convert to the new units.

7. Push OK to set.
8. The Console display shows the Sound Settings prompt with the current setting. Push the Increase/Decrease buttons to change between “ON” and “OFF”.
9. Push OK to set.
10. The Console display shows the TOTAL RUN HOURS for the machine.
11. For the next prompt, push the OK button.
12. The Console display shows the Software Version prompt.
13. For the next prompt, push the OK button.
14. The Console will display the Power-Up Mode screen.

Read all maintenance instructions fully before you start any repair work. In some conditions, an assistant is necessary to do the necessary tasks.

Equipment must be regularly examined for damage and repairs. The owner is responsible to make sure that regular maintenance is done. Worn, damaged or loose components must be repaired or replaced immediately. Only manufacturer supplied components can be used to maintain and repair the equipment.

If at any time the Warning labels become loose, unreadable or dislodged, contact Nautilus Customer Service for replacement labels.

Disconnect all power to the machine before you service it.

Daily: Before each use, examine the exercise machine for loose, broken, damaged, or worn parts. Do not use if found in this condition. Repair or replace all parts at the first sign of wear or damage. After each workout, use a damp cloth to wipe your machine and Console free of moisture.

Note: Avoid excessive moisture on the Console.

NOTICE: If necessary, only use a mild dish soap with a soft cloth to clean the Console. Do not clean with a petroleum based solvent, automotive cleaner, or any product that contains ammonia. Do not clean the Console in direct sunlight or at high temperatures. Be sure to keep the Console free of moisture.

Weekly: Clean the machine to remove any dust, dirt, or grime from the surfaces. Check for smooth seat slider operation. If needed, apply a very thin coating of silicone lube to ease operation.

Silicone lubricant is not intended for human consumption. Keep out of reach of children. Store in a safe place.

Note: Do not use petroleum based products.

Monthly or after 20 hours: Check pedals and crank arms and tighten as necessary. Make sure all bolts and screws are tight. Tighten as necessary.

NOTICE: Do not clean with a petroleum based solvent or an automotive cleaner. Be sure to keep the Console free of moisture.

Maintenance Parts

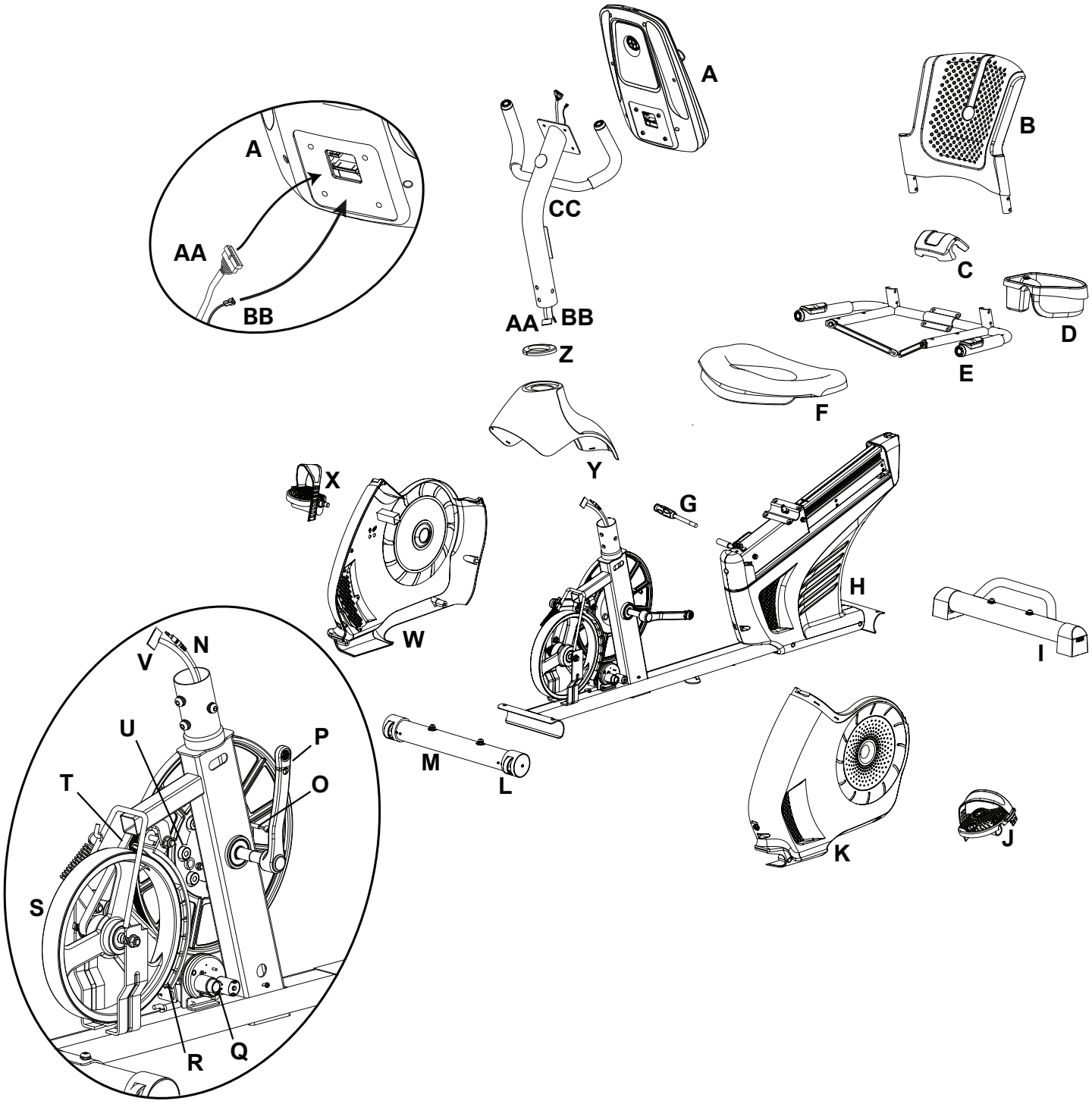

A	Console	K	Shroud, Left	U	Speed Sensor Magnets (8)
B	Seat Back	L	Transport Wheel	V	Console Cable, Lower
C	Seat Cover	M	Stabilizer, Front	W	Shroud, Right
D	Water Bottle Holder	N	Heart Rate Cable, Lower	X	Pedal, Right
E	Handlebar, Side	O	Speed Sensor	Y	Shroud, Upper
F	Seat Bottom	P	Crank Arm	Z	Shroud Cap
G	Seat Adjustment Handle	Q	Servo Motor	AA	Console Cable, Upper
H	Frame Assembly	R	Brake Assembly	BB	Heart Rate Cable, Upper
I	Rear Stabilizer	S	Flywheel	CC	Console Mast
J	Pedal, Left	T	Drive Belt		

Condition/Problem	Things to Check	Solution
No display/partial display/ unit will not turn on	Check electrical (wall) outlet	Make sure unit is plugged into a functioning wall outlet.
	Check connection at front of unit	Connection should be secure and undamaged. Replace adapter or connection at unit if either are damaged.
	Check data cable integrity	All wires in cable should be intact. If any are visibly crimped or cut, replace cable.
	Check data cable connections/orientation	Be sure cable is connected securely and oriented properly. Small latch on connector should line up and snap into place.
	Check console display for damage	Check for visual sign that console display is cracked or otherwise damaged. Replace Console if damaged.
	Console Display	If Console only has partial display and all connections are fine, replace the Console.
		If the above steps do not resolve the problem, contact Customer Care for further assistance.
Unit operates but Contact HR not displayed	HR cable connection at Console	Be sure cable is connected securely to Console.
	HR cable box connection	Be sure cables from handlebars and cable to Console are secure and undamaged.
	Sensor grip	Be sure hands are centered on HR sensors. Hands must be kept still with relatively equal pressure applied to each side.
	Dry or calloused hands	Sensors may have difficulty with dried out or calloused hands. A conductive electrode cream (heart rate cream) can help make better conduct. These are available on the web or at medical or some larger fitness stores.
	Static Handlebar	If tests reveal no other issues, Static Handlebar should be replaced.
Unit operates but Telemetric HR not displayed	Chest Strap (optional)	Strap should be “POLAR®” compatible and uncoded. Make sure strap is directly against skin and contact area is wet.
	Chest Strap Batteries	If strap has replaceable batteries, install new batteries.
	Check User Profile	Select the Edit User Profile option for the User Profile. Go to the WIRELESS HR setting and make sure that the current value is set to ON.
	Interference	Try moving unit away from sources of interference (TV, Microwave, etc).
	Replace Chest Strap	If interference is eliminated and HR does not function, replace strap.
	Replace Console	If HR still does not function, replace Console.
Unit operates but Telemetric HR displayed incorrectly	Interference	Make sure that the HR receiver is not blocked by a personal electronic device in the left side of the media tray.
Console displays “E2” error code	Check data cable integrity	All wires in cable should be intact. If any are cut or crimped, replace cable.
	Check data cable connections/orientation	Be sure cable is connected securely and oriented properly. Small latch on connector should line up and snap into place.
	Console Electronics	If tests reveal no other issues, contact Customer Care.

Condition/Problem	Things to Check	Solution
No speed/RPM reading, Console displays “Please Pedal” error code	Check data cable integrity	All wires in cable should be intact. If any are cut or crimped, replace cable.
	Check data cable connections/orientation	Be sure cable is connected securely and oriented properly. Small latch on connector should line up and snap into place.
	Check magnet position (requires shroud removal)	Magnets should be in place on pulley.
	Check Speed Sensor (requires shroud removal)	Speed sensor should be aligned with magnet and connected to data cable. Realign sensor if necessary. Replace if there is any damage to the sensor or the connecting wire.
Resistance does not change (machine turns on and operates)	Batteries (if equipped)	Replace batteries and check for proper operation.
	Check Console	Check for visual sign that Console is damaged. Replace Console if damaged.
	Check data cable integrity	All wires in cable should be intact. If any are visibly crimped or cut, replace cable.
	Check data cable connections/orientation	Be sure cable is connected securely and oriented properly. Reseat all connections. Small latch on connector should line up and snap into place.
	Check Servo Motor (requires shroud removal)	If magnets move, adjust until they are within the proper range. Replace Servo Motor if not functioning properly.
		If the above steps do not resolve the problem, contact Customer Care for further assistance.
Console shuts off (enters sleep mode) while in use	Check electrical (wall) outlet	Make sure unit is plugged into a functioning wall outlet.
	Check connection at front of unit	Connection should be secure and undamaged. Replace adapter or connection at unit if either are damaged.
	Check data cable integrity	All wires in the cable should be intact. If any are cut or crimped, replace cable.
	Check data cable connections/orientation	Be sure cable is connected securely and oriented properly. Small latch on connector should line up and snap into place.
	Reset machine	Unplug unit from electrical outlet for 3 minutes. Reconnect to outlet.
	Check magnet position (requires shroud removal)	Magnets should be in place on pulley.
	Check Speed Sensor (requires shroud removal)	Speed sensor should be aligned with magnet and connected to data cable. Realign sensor if necessary. Replace if there is any damage to the sensor or the connecting wire.
Fan will not turn on or will not turn off	Check data cable integrity	All wires in cable should be intact. If any are cut or crimped, replace cable.
	Check data cable connections/orientation	Be sure cable is connected securely and oriented properly. Small latch on connector should line up and snap into place.
	Reset machine	Unplug unit from electrical outlet for 3 minutes. Reconnect to outlet.
Fan will not turn on, but Console operates	Check for blockage of fan	Unplug unit from electrical outlet for 5 minutes. Remove material from fan. If necessary, detach the Console to help with removal. Replace the Console if unable to remove blockage.

Condition/Problem	Things to Check	Solution
Unit rocks/does not sit level	Check leveler adjustment	Adjust levelers until machine is level.
	Check surface under unit	Adjustment may not be able to compensate for extremely uneven surfaces. Move machine to level area.
Pedals loose/unit difficult to pedal	Check pedal to crank connection	Pedal should be tightened securely to crank. Be sure connection is not cross threaded.
	Check crank to axle connection	Crank should be tightened securely to axle. Be sure cranks are connected at 180 degrees from each other.
Clicking sound when pedaling	Check pedal to crank arm connection	Remove pedals. Make sure there is no debris on threads, and reinstall the pedals
Seat Assembly shifts / squeaks when in use	Hardware	Check hardware that attaches Seat assembly, and fully tighten hardware.
Workout results will not sync with Bluetooth® enabled device	Current console mode	Machine must be in Idle Mode to sync. Push the PAUSE/STOP button until the Power-Up Mode screen is displayed.
	Total time of workout	A workout must be longer than 1 minute to be saved and posted by the Console.
	Fitness machine	Unplug unit from electrical outlet for 5 minutes. Reconnect to outlet.
	Bluetooth® enabled device	Consult your device to be sure that the Bluetooth® wireless feature has been enabled on it.
	Fitness App	Review Specifications of Fitness App and confirm your device is compatible.
		Contact appsupport@nautilus.com for further assistance.
Workout results not posting from Schwinn Trainer™ App to MyFitnessPal® account or Under Armour® Connected Fitness	Sync accounts	From the Menu icon on the Schwinn Trainer™ App, select the Sync to MyFitnessPal® or Under Armour® Connected Fitness.
	Sync fails	Review account and password.
		Contact appsupport@nautilus.com for further assistance.

Who Is Covered
This warranty is valid only to the original purchaser and is not transferable or applicable to any other person(s).

What Is Covered
Nautilus, Inc. warrants that this product is free from defects in materials and workmanship, when used for the purpose intended, under normal conditions, and provided it receives proper care and maintenance as described in the Product's Assembly and Owner's manual. This warranty is good only for authentic, original, legitimate machines manufactured by Nautilus, Inc. and sold through an authorized agent and used in the United States or Canada.

Terms
- Frame 10 years
- Mechanical parts 2 years
- Electronics 1 year
- Labor 90 days

(Labor support does not include the installation of replacement parts involved in the initial product assembly and preventative maintenance services.)

How Nautilus Will Support the Warranty
Throughout the terms of the warranty coverage, Nautilus, Inc. will repair any machine that proves to be defective in materials or workmanship. Nautilus reserves the right to replace the product in the event a repair is not possible. When Nautilus determines replacement is the correct remedy, Nautilus may apply a limited credit reimbursement toward another Nautilus, Inc. brand Product, at our discretion. This reimbursement may be prorated based on length of ownership. Nautilus, Inc. provides repair service within major metropolitan areas. Nautilus, Inc. reserves the right to charge the consumer for travel outside these areas. Nautilus, Inc. is not responsible for dealer labor or maintenance charges beyond the applicable warranty period(s) stated herein. Nautilus, Inc. reserves the right to substitute material, parts or products of equal or better quality if identical materials or products are not available at the time of service under this warranty. Any replacement of the product under the terms of the Warranty in no way extends the original Warranty period. Any limited credit reimbursement may be prorated based on length of ownership. THESE REMEDIES ARE THE EXCLUSIVE AND SOLE REMEDIES FOR ANY BREACH OF WARRANTY.

What You Must Do
- Retain appropriate and acceptable Proof of Purchase.
- Operate, maintain, and inspect the Product as specified in the Product Documentation (Assembly, Owner's Manuals, etc.).
- Product must be used exclusively for the purpose intended.
- Notify Nautilus within 30 days after detecting an issue with the Product.
- Install replacement parts or components in accordance with any Nautilus instructions.
- Perform diagnostic procedures with a trained Nautilus, Inc representative if requested.

What Is Not Covered
- Damage due to abuse, tampering or modification of the Product, failure to properly follow assembly instructions, maintenance instructions, or safety warnings as stated in the Product Documentation (Assembly, Owner's Manuals, etc), damage due to improper storage or the effect of environmental conditions such as moisture or weather, misuse, mishandling, accident, natural disasters, power surges.
- A machine placed or used in a commercial or institutional setting. This includes gyms, corporations, work places, clubs, fitness centers and any public or private entity that has a machine for use by its members, customers, employees or affiliates.
- Damage caused by exceeding maximum user weights as defined in the Product's Owner's manual or warning label.
- Damage due to normal usage and wear and tear.
- This warranty does not extend to any territories or countries outside the United States and Canada.

How to Obtain Service
For Products purchased directly from Nautilus, Inc. contact the Nautilus office listed on the Contacts page of the products Owner's manual. You may be required to return the defective component to a specified address for repair or inspection, at your expense. Standard ground shipping of any warranty replacement parts will be paid by Nautilus, Inc. For products purchased from a retailer, you may be asked to contact your retailer for warranty support.

Exclusions
The preceding warranties are the sole and exclusive express warranties made by Nautilus, Inc. They supersede any prior, contrary or additional representations, whether oral or written. No agent, representative, dealer, person or employee has the authority to alter or increase the obligations or limitations of this warranty. Any implied warranties, including the WARRANTY OF MERCHANTABILITY and any WARRANTY OF FITNESS FOR A PARTICULAR PURPOSE, are limited in duration to the term of the applicable express warranty provided above, whichever is longer. Some states do not allow limitations on how long an implied warranty lasts, so the above limitation may not apply to you.

Limitation of Remedies
EXCEPT AS OTHERWISE REQUIRED BY APPLICABLE LAW, THE PURCHASER'S EXCLUSIVE REMEDY IS LIMITED TO REPAIR OR REPLACEMENT OF ANY COMPONENT DEEMED BY NAUTILUS, INC. TO BE DEFECTIVE UNDER THE TERMS AND CONDITIONS STATED HEREIN. IN NO EVENT WILL NAUTILUS, INC. BE LIABLE FOR ANY SPECIAL, CONSEQUENTIAL, INCIDENTAL, INDIRECT OR ECONOMIC DAMAGES, REGARDLESS OF THE THEORY OF LIABILITY (INCLUDING, WITHOUT LIMITATION, PRODUCT LIABILITY, NEGLIGENCE OR OTHER TORT) OR FOR ANY LOST REVENUE, PROFIT, DATA, PRIVACY OR FOR ANY PUNITIVE DAMAGES ARISING OUT OF OR RELATED TO THE USE OF THE FITNESS MACHINE EVEN IF NAUTILUS, INC. HAS BEEN ADVISED OF THE POSSIBILITY OF SUCH DAMAGES. THIS EXCLUSION AND LIMITATION SHALL APPLY EVEN IF ANY REMEDY FAILS OF ITS ESSENTIAL PURPOSE. SOME STATES DO NOT ALLOW THE EXCLUSION OR LIMITATION OF CONSEQUENTIAL OR INCIDENTAL TYPE DAMAGES SO THE ABOVE LIMITATION MAY NOT APPLY TO YOU.

State Laws
This warranty gives you specific legal rights. You may also have other rights, which vary from state to state.

Expirations
If the warranty has expired, Nautilus, Inc. may assist with replacements or repairs to parts and labor, but there will be a charge for these services. Contact a Nautilus office for information on post-warranty parts and services. Nautilus does not guarantee availability of spare parts after expiration of warranty period.

International Purchases
If you purchased your machine outside of the United States consult your local distributor or dealer for warranty coverage.

Nautilus® Bowflex® Schwinn® Universal®

8011519.020118.C